Karl-Friedrich Berger,
Sandra Kiefer (Hrsg.)

JAHRBUCH 2022

Dichten. Kleben. Polymer.

ISGATEC®

Improving a Gear Box Sealing System

Individual Test Design Based on Given Application Parameters and Failure Analysis

AUTOMOTIVE – In the event of damage to sealing systems, expert knowledge in dealing with these problems is often not available to many industrial users. The development engineer is faced with the question of improving the product to meet the new requirements. The aim of this publication is to provide a proven guide for dealing with problematic sealing systems.

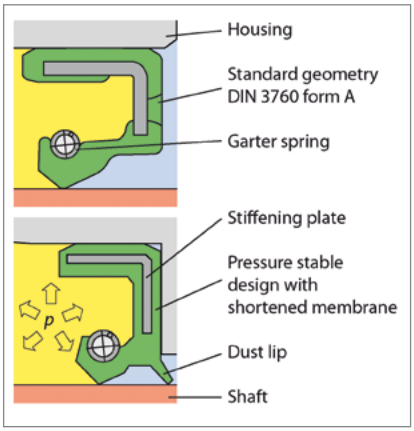

Figure 1: Different types of radial lip seals
(Figure: IMA)

Elastomeric radial lip seals are used to seal shaft interfaces in all industrial applications and especially in the automotive sector. They are available at the market in different sizes and designs, as well as in different materials. Typical elastomeric materials are FKM (fluorelastomer) and NBR (nitrile rubber). In addition to individual, application-related designs, DIN 3760/ 3761 [1, 2] specifies a number of standards. **Figure 1** shows the cross-section of a standard radial lip seals according DIN 3760 form A at the top and a pressure stable profile with a protective lip (dust lip) at the bottom. The sealing system always consist of the elastomeric sealing ring themselves, the fluid to be sealed and the sealing counterface (shaft). This paper describes a typical process in sealing technology, which often starts from a failure and/or an optimization request. The process aims on finding the root cause of the

Von Lukas Merkle, M. Sc., Research assistant, ORCID: 0000-0002-1730-0582 (Corresponding Author)

Dr.-Ing. Matthias Baumann, Team Manager Metrology, ORCID: 0000-0001-7799-7628

PD Dr.-Ing. Frank Bauer, Head of sealing technology & StutCAD, ORCID: 0000-0002-1962-5153
University of Stuttgart, Institute of Machine Components (IMA),
www.ima.uni-stuttgart.de/forschung/dichtungstechnik

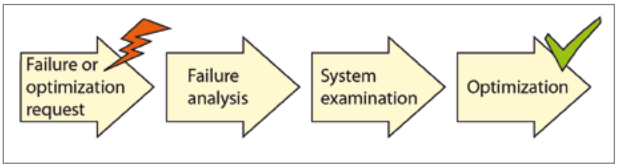

Figure 2: Workflow of a sealing system optimisation
(Figure: IMA)

failure and optimising a given sealing system. The procedure is illustrated by means of a real failure from the beginning of the failure analysis through the optimization process to the solution (**Figure 2**).

The first step in this process is a comprehensive failure analysis to evaluate the root cause of the failure. The second step is an empirical system examination. A test run is developed to recreate the failure on the test rig. As soon as there is a reliable test run available, the optimization process can start in the third step. On the test rig, different types of seals can be tested fast and scientifically. So, the best sealing system can be chosen for the product. This procedure is working both, for the development of new product, as well as in the course of a product care in a running series. Example for illustrating the procedure is a vehicle gearbox sealing system. As these are ongoing cooperations, the manufacturer of the gearbox, and the manufacturer of the radial lip seals deliberately remain anonymous.

Initial Situation

The industrially used radial lip seals in many machines and plants, are not always following state-of-the-art technology. The use of certain seal designs in a company has

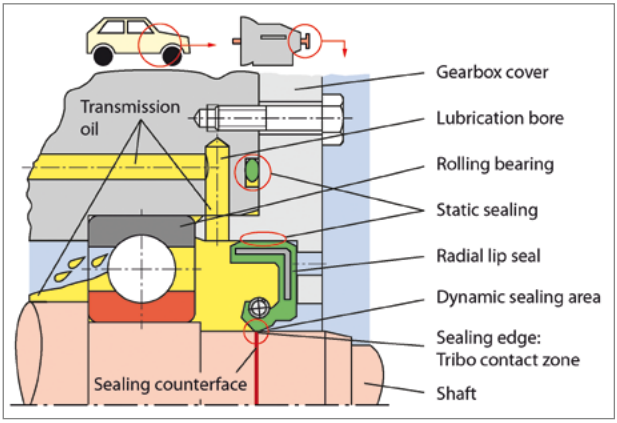

Figure 3: Gear box drive shaft sealing system
(Figure: IMA)

often grown historically. And according to the pragma "never change a running system" they gladly remain unchanged for many years. Seals are not only selected and used according to technical criteria. Often, they are also selected for economic reasons, due to common parts approaches in the company or a supplier strategy.

Figure 3 illustrates the initial situation in the example to discuss. The vehicle gear box in question, has been in series production for several years. The gearbox is designed pressureless due to a conventionally ventilation. In some operating conditions, however, a differential pressure of less than 0.5 bar may occur. **Figure 3** shows the principal sealing situation at one of the transmission drive shafts in detail. Due to common parts approaches, there is a radial lip seal with a pressure stable design used at this point. The sealing edge of this radial lip seal is designed for applications in the pressure range up to 10 bar and pulsating pressures up to max. 25 bar. This is actually not to recommend here, as the gear box is mainly ventilated. Pressure-stable radial lip seals have some design-related disadvantages with regard to the ability of the sealing edge to follow the shaft eccentricity, frictional power and sealing edge temperature. Due to the low and only temporarily prevailing differential pressure, a pressure-stable radial lip seal is not necessary in this application.
Despite of the technically not optimal design of the sealing system, the gear box sealing performed sufficiently well so far.

Failure or/and Optimization Request

In most applications sealing systems work without problems. Even if they are not fully optimized. In some individual cases, however, there are higher loads or unusual operating conditions that may cause failure of the sealing system. In addition, the desire to optimize the sealing system can arise in the ongoing product life cycle.

In the present case, there was a failure of the sealing system, shown by excessive leakage. The failure did not occur for all products, but only in certain sales regions. There, however, the sealing systems have increasingly led to serious problems. Furthermore, in this context an optimization of the sealing system was initiated. One of the design-related disadvantages of pressure stable radial lip seal is the significantly higher radial load compared to a radial lip seal with standard geometry in the same diameter to seal. The used pressure stable radial lip seals have radial loads $F_R = 37 \ldots 42$ N. A radial lip seal with standard geometry has a radial load $F_R = 16 \ldots 20$ N. The radial load of the radial lip seal with pressure stable profile is about 120% higher. This leads to higher frictional power. It favours wear and higher excess temperatures. Additionally, pressure stable radial lip seals have a greater tendency for leakage, even under ventilated conditions.

Failure Analysis

The failed sealing system from the field has to be analysed as complete as possible for damage. In addition to the seal and shaft, a sample of the lubricant should also be analysed. Handling, transport and intermediate storage must be carried out with great care. Otherwise it is not clear whether a damage has occurred in the product or during the handling of the components.

Figure 4 shows a methodology for failure analysis. In the FVA project 696 [3] this was developed on the basis of VDI 3822 [4]. This method refers mainly to the sealing edge. To determine the cause of failure a visual analysis has to be carried out. A comparison with the damage catalogue defines the cause of failure.

The visual analysis of the sealing edge is the most important part to uncover the cause of the failure. But there are also other aspects to cover. In addition to a visual analysis of the sealing edge and the sealing edge environment, the geometry of the sealing edge is recorded and radial load measurements are carried out. In special cases, further analysis such as elastomer hardness measurements or SEM measurements are carried out. The examination of the shaft includes a comprehensive lead measurement (micro lead, macro lead, thread method), an optical analysis of the shaft surface to detect damages like scratches, as well as a measurement and examination of the wear track of the sealing edge. An overview of the analysis possibilities to determine the cause of failure is given in **figure 5**.

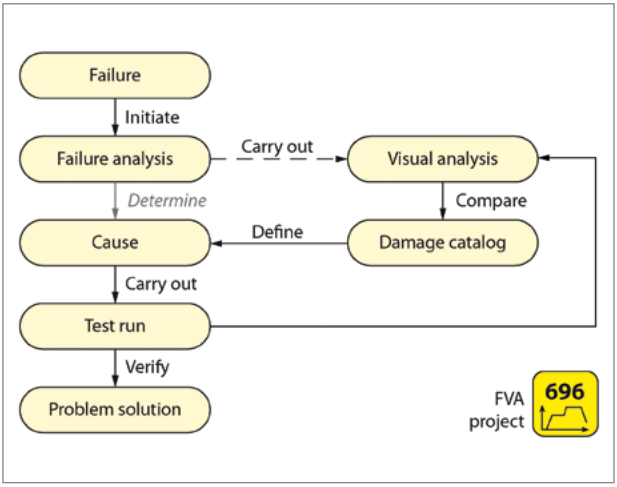

Figure 4: Failure analysis of the sealing edge according FVA 696 [3] (Figure: IMA)

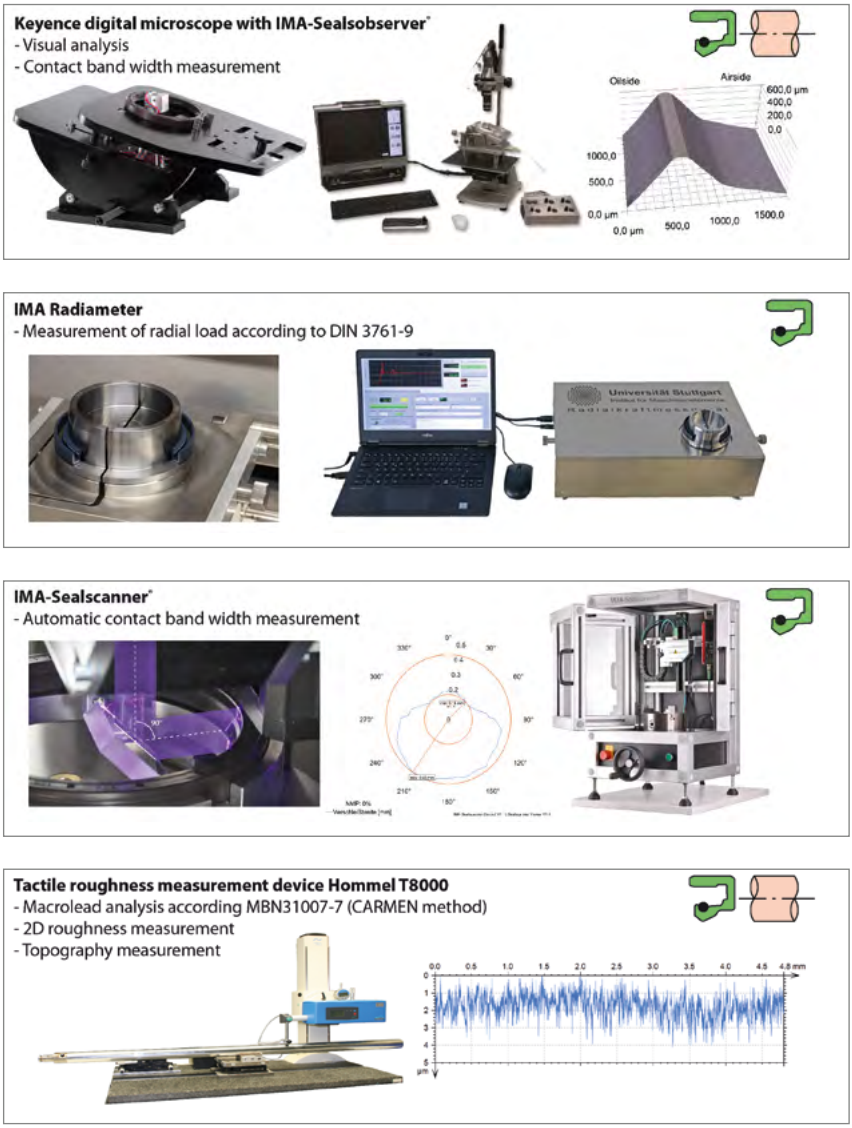

Figure 5: Failure analysis devices and methods (Figure: IMA)

Modular hardness measurement device Bareiss digi test II
- Elastomer hardness measurement

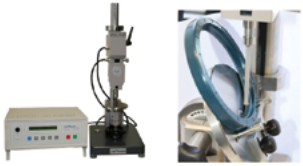

Confovis/ Brucker NPFLEX-LA
- Microlead analysis according IMA
- Macrolead analysis according MBN31007-7
- 2D/ 3D roughness measurment
- Topography measurement

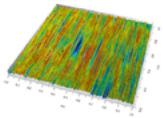

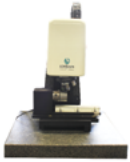

Thread method
- Lead analysis

Keyence VK-9710 laser microscope
- Laser microscope analysis
- Topography measurement with colour image

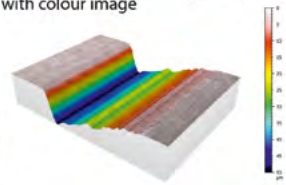

Scanning electron microscope Phenom ProX
- SEM analysis
- EDX analysis

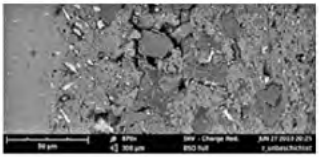

Rheometer Anton Paar MCR 302
- Lubricant analysis

Analysis method relevant for: Seal Shaft Fluid

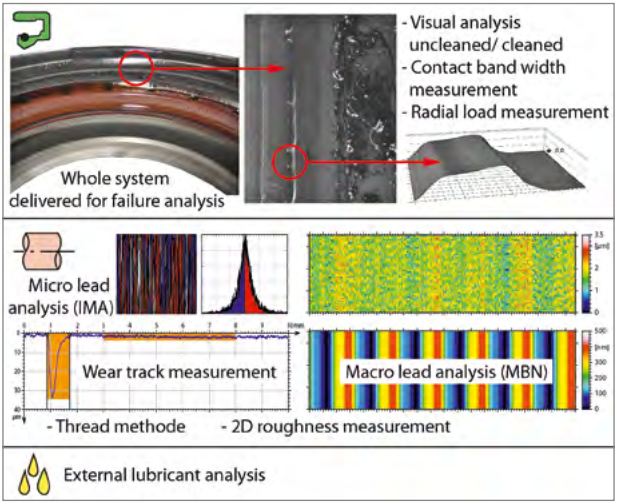

Figure 6: Failure analysis of the seal, the shaft and the lubricant (Figure: IMA)

It is not always necessary to perform all analyses. The choice of the appropriate analytical methods must be decided on a case-by-case basis. Optical analysis with a digital microscope is recommended in any case and should always be carried out at the beginning of the failure analysis. The radial load measurement gives a good indication of the overall condition of a radial lip seal. For the classification of the measurement results a new seal should always be measured comparative. If a change in hardness at the sealing edge is suspected, an elastomer hardness measurement is recommended. But this is associated with greater effort and is only carried out if necessary. A-Sealscanner measurement however is always recommended in order to be able to completely determine the wear of the sealing edge. In order to exclude manufacturing defects of the shaft as the cause of failure, a lead analysis should be carried out and the surface roughness should be determined. Laser microscope and SEM images can be used to detect special surface structures on the shaft and the sealing edge. SEM images in particular, can only be created with a special preparation. Therefore, a SEM examination is not possible without destruction. Rheometer analysis are used to characterize an unknown lubricant.

In the present case, there was a failure of the of the gearbox sealing system shown by excessive leakage, as mentioned before. All parts of the failed sealing system were delivered for analysis. The radial lip seal was still in its housing. The shaft sleeve also has been delivered. The parts were uncleaned and carefully packed and transported. So, an optimal analysis could be carried out. The used gearbox oil was also sent.

A small amount of the oil was directly sent to an extern oil analysis institute. The visual analysis of the shaft and the radial lip seal was carried out (see summary in **figure 6**). In addition, the radial load of the sealing ring and the contact band width of the sealing edge were measured. The total circumference of the radial lip seal and the shaft was considered. **Figure 6** shows only a small part of the analysis.

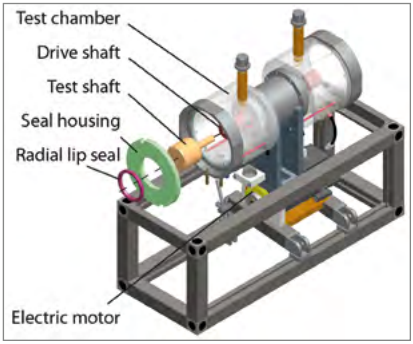

Figure 7: Modular test rig (Figure: IMA)

The delivered sealing system had clear traces of leakage. The visual analysis of the sealing edge showed sticking and soluble oil carbon deposits. The sealing edge showed heavy wear. The contact band width of the sealing edge was within a range between 0.65 … 0.7 mm. The wear surface was smooth and evenly worn. The lead analysis of the shaft was mainly inconspicuous. A small micro lead angle was detected, but this is unlikely to have had a strong impact on the damage evolution. The 2D roughness of the sealing counterface was within the specifications of DIN 3760 [1] (R_a = 0.2 … 0.8 µm, R_z = 1 … 5 µm, R_{max} = 6.3 µm). The tactile wear track measurement shows a wear track depth of 32 µm. The wear track width is measured with 0.8 mm. The oil analysis was carried out externally. It showed a very strong presumption with high particle concentrations, which is far above the internal limits.

Conclusion: The sealing system failed because of high wear rates at the sealing edge, and on the shaft. The large contact band width and the deep wear track are caused by the unusual high amount of abrasive pollution in the transmission oil.

System Examination

The failure analysis is followed by a systematic system examination on the test rig. The first step is to reproduce the failure under laboratory conditions. The sealing system with the radial lip seal, the shaft and the oil were therefore tested on endurance test rigs. The test rig is built up modular so several sealing systems can be tested simultaneously. **Figure 7** shows a module of this test rig.

The radial lip seal is mounted in an adaptable housing. The electric motor drives the central shaft in the middle of two identical test chambers. The test chambers are filled

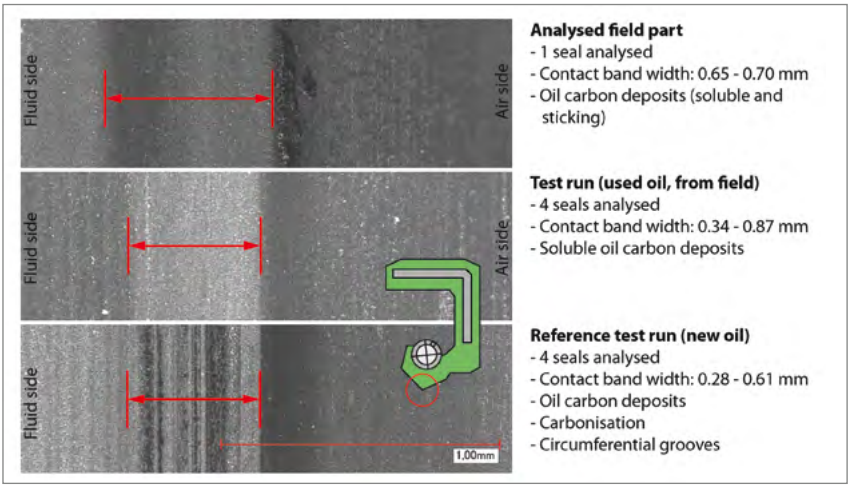

Figure 8: Sealing edges after failure analysis: field part and test rig with oil from field/new oil
(Figure: IMA)

with the oil to test and the test shafts are mounted to the drive shaft. The two test chambers allow to test two individual sealing systems on one test rig module.

To perform a test run, a representative load collective is derived from the real load. The thermal load and the fluid to be sealed corresponds to the situation in the field. The generation of load collectives was part of two research projects FVA 696 I and II [3, 5] and is currently being further analysed in a third project FVA 696 III. A representative load collective must be created specifically for an application. In addition to different velocity levels, the load collective also includes the transition between velocity levels, changes in the direction of rotation, temperature changes and operating pressures. To reduce costs, the test run is usually carried out on two test rig modules, with four sealing systems (in contrast to the dynamic test according to DIN 3761 part 11 [6], which requires 6 to 12 samples).

To validate the test run, the sealing system is subjected to the same failure analysis as the sealing system from the field. If the test run is carried out correctly, it will deliver the same type of failure with the same characteristics as the sealing system in the field.

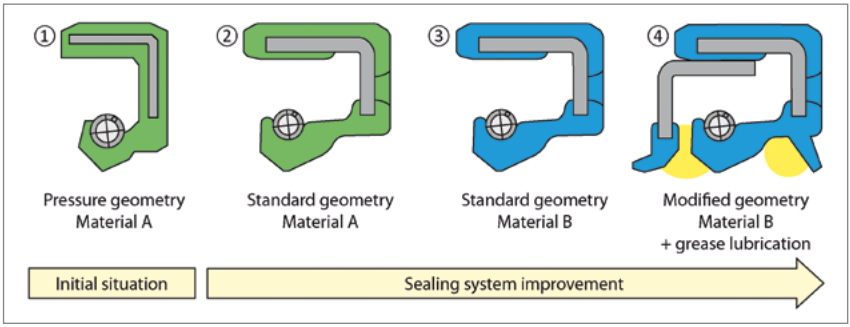

Figure 9: Four different types of shaft seals
(Figure: IMA)

The load collective for testing the gearbox sealing system was developed and adapted in several iteration stages in cooperation with the OEM. A test cycle with a running time of less than 200 h was developed by selective shirring and by removing non-damaging parts. Nevertheless, the first test run was carried out under identical conditions like in field to check whether the failure could be reproduced. For this purpose, identical radial lip seals, identical shafts, and the original contaminated oil from the field were used in the test rig. They were tested with the load collective described above. **Figure 8** shows the failure analysis of the sealing edges. The top picture shows the seal from field. The middle picture shows one of the analysed seals after the test run with used oil. The bottom picture shows the sealing edge of a seal after a reference test run with new oil (same oil type). All pictures were taken at cleaned sealing edges.

The analysis shows an almost identical pattern of damage of the field failure and the test run. Both show smooth wear with a large contact band width. The test run was firstly carried out without overpressure. The contact band width after the test run is therefore still slightly below the analysed field part. The reference test run with new clean oil shows in contrast a carbonised surface of the sealing edge with circumferential grooves. This means thermal damage to the lubricant and the elastomer. During normal operation situations the sealing system is already thermally overloaded. With contaminated oil, the abrasive particles in the oil continuously remove the damaged surface layer. The thermal damage is not visible due to the high wear rate. This effect is shown on the test rig to the same extent as in the field. The test run can therefore be regarded as representative.

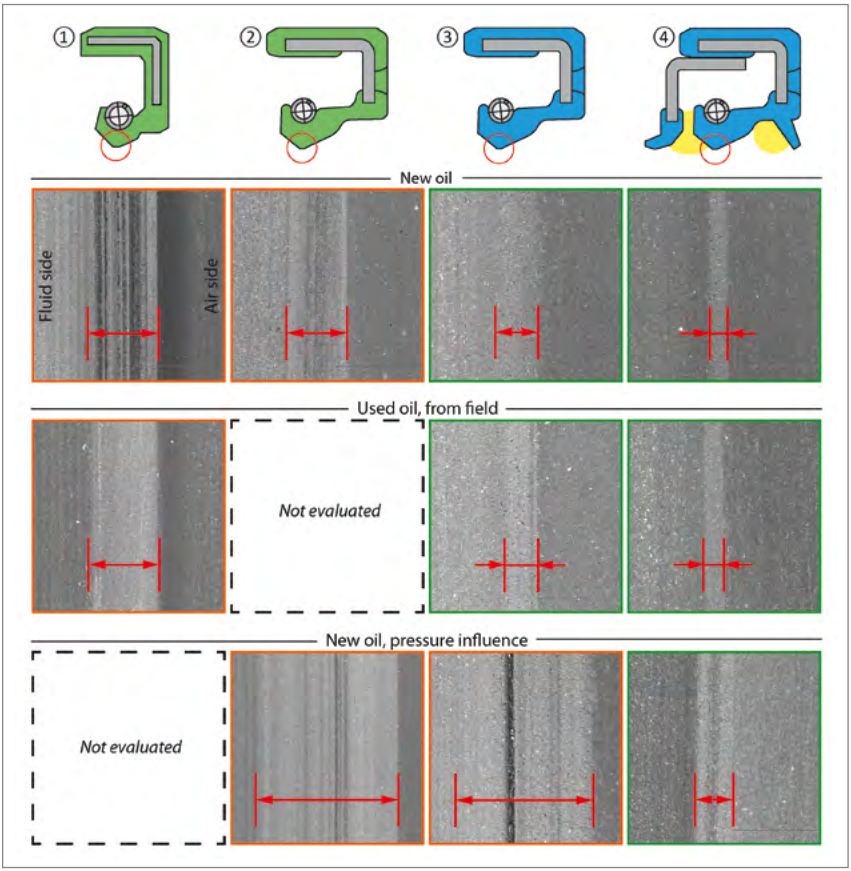

Figure 10: Sealing edges of the alternative shaft seal types (red box = fail, green box = pass)
(Figure: IMA)

Optimization

Principally, all parts of a sealing system can be optimized. In this case, the shaft surface is almost optimal. So, this part will remain. In contrast to this, the oil type in this application is not the best choice for the sealing system. But for other reasons the oil cannot be changed. The heavy pollution of the oil could be avoided by shorter oil change intervals. Oil change intervals are part of the maintenance, carried out by the customer of the vehicle. Because of cost reduction reasons, they should be as long as possible. The goal therefore was to improve the robustness of the sealing system without

involving the customer and without increasing the lifetime cost of the product. So, the only thing to change easily is the radial lip seal itself.

There are some requirements for a new radial lip seal type. At first the new shaft seal has to be highly tolerant to polluted oil. Also, due to the special installation situation, a low differential pressure may be present at the seal, despite the gearbox being ventilated. This must be considered in the selection of a new seal type. In addition, the efficiency of the sealing system has to be increased. For the realization, three sealing rings with standard profile were selected in the first instance. They are shown in **figure 9.**

The first two alternative radial lip seals ② and ③ are the standard geometry DIN 3760 form A [1]. The first of these two is manufactured in the same material as the initial radial lip seal. The second radial lip seal is made of a different material. This material has proven to be more wear resistant in other applications. The last alternative ④ is a combination of a standard profile with an additional sealing edge and an initial grease lubrication between the sealing edges. The challenge is to stabilize the system without additional oil changes. Therefore, a complex combined radial lip seal was considered. This seal is often used in industrial gearboxes, and is designed to be particularly robust against polluted operating environments.

With these seals a comprehensive test matrix was carried out. The first test is carried out with new oil, to test the oil elastomer compatibility. As a basic requirement every radial lip seal has to perform well with new oil. The second test is carried out with used oil from field. With this test, the tendencies to abrasive wear were tested. In the last test run the test chamber is pressurized, to simulate differential pressure at the radial lip seal. Every picture in **figure 10** is representative for a test run, carried out with four radial lip seals.

The seal with pressure stable geometry ① failed the test run with new oil, because of carbonisation and circumferential grooves and the test run with polluted oil because of heavy wear. Since this seal has already failed the first two tests, the test run under pressure influence was not carried out.

The first alternative radial lip seal ② in the same material as ① with standard geometry failed with new oil, and under pressure influence, also because of heavy wear. The test run with polluted oil was not carried out, because of the previous failure.

The change to a more wear resistant material ③ improved the performance of the sealing system, both, with new and used oil from field. There was only moderate wear at the sealing edges. But under pressure influence the standard profile did not perform well. The test showed heavy wear and circumferential grooves at the sealing edge.

The optimized profile with additional grease lubrication ④ solved this problem. The performance with new and used oil was even better, and under pressure influence, there was only decent wear. Of the variants tested, this radial lip seal is the best choice for the application. The sealing system is more expensive and complex in design compared to the first variants. In this case, however, it offers high safety and robustness. In further tests the sealing system could possibly be optimized or the costs could be reduced. But after weighing up the costs and benefits, no further tests were carried out. The solution found was considered sufficient.

Conclusion

With the method shown, it is possible to assess and reconstruct various cases of failure. With the help of optimized load collectives, the sealing systems can be examined on the test rig with short running times. The sealing system can be optimized under consideration of the application conditions. The development times for new sealing systems can thus be drastically reduced. During this 10-month project, a useful replacement for the original radial lip seal could be found. The new optimized sealing system is meeting all requirements. It is already installed in the first machines to perform field tests.

References

[1] DIN Deutsches Institut für Normung e.V.: DIN 3760, Radial-Wellendichtringe (rotary shaft lip type seals). Berlin: Beuth Verlag, 1996-09.

[2] DIN Deutsches Institut für Normung e.V.: DIN 3761 Teil 1, Radial-Wellendichtringe für Kraftfahrzeuge – Begriffe, Maßbuchstaben, zulässige Abweichungen, Radialkraft (Rotary shaft lip type seals for automobils; terms, formula symbols, tolerances). Berlin: Beuth Verlag, 1984-01.

[3] Eipper, Axel; Forschungsvereinigung Antriebstechnik e.V.: Lastkollektive RWDR – Gestaltung von Lastkollektiven zur Prüfung von Radial-Wellendichtringen, Forschungsvorhaben Nr. 696 I, Heft 1222, Abschlussbericht. Frankfurt: 2017-04.

[4] Verein Deutscher Ingenieure e.V.: Schadensanalyse – Grundlagen und Durchführung einer Schadensanalyse (Failure analysis – Fundamentals and performance of failure analysis). Berlin: Beuth Verlag, 2011-11.

[5] Eipper, Axel: Lastkollektive RWDR II – Gestaltung von Lastkollektiven zur Prüfung von Radial-Wellendichtungen II, Forschungsvorhaben Nr. 696 II, Heft 1318, Abschlussbericht. Frankfurt 2018-12.

[6] DIN Deutsches Institut für Normung e.V.: DIN 3761 Teil 11, Radial-Wellendichtringe für Kraftfahrzeuge – Funktionsprüfung, Leckage-Beurteilung (Rotary shaft lip type seals for automobils; test, evaluation of leakage). Berlin: Beuth Verlag, 1984-01.

Buchtipp: Bauer, Frank.: Tribologie. prägnant und praxisrelevant.

Buchtipp: Bauer, Frank.: Federvorgespannte-Elastomer-Radial-Wellendichtungen. Grundlagen der Tribologie & Dichtungstechnik, Funktion und Schadensanalyse.

Meisterwerk+: Individuelle Sonderkonstruktionen von DOYMA

ISGATEC GmbH, Mannheim

http://www.isgatec.com
Printed in Germany
Satz und Umschlaggestaltung: Büro für visuelle Kommunikation, Dipl.-Des. Rainer E. Rühl, Alsheim
Druck: Silber Druck oHG, Lohfelden

ISBN Print: 978-3-946260-05-9
ISBN Digital: 978-3-946260-06-6

Inhalte

Das JAHRBUCH Dichten. Kleben. Polymer. 2022 enthält 49 wissenschaftliche und praxisorientierte Fachbeiträge aus den Bereichen **Dichten. Kleben. Polymer.**:

Dichten
Statische Dichtungen
Dynamische Dichtsysteme
Flüssigdichtsysteme
Maschinen und Anlagen
Mess- und Prüftechnik

Kleben
Klebtechnik
Klebstoffe
Mess- und Prüftechnik

Polymer
Dienstleistungen
Werkstoffe

Die einzelnen Fachbeiträge geben branchenübergreifend Impulse und Lösungen für Ihre tägliche Arbeit und Entwicklungen.

Die Jahrbuch-Reihe umfasst inzwischen 18 Ausgaben mit mehr als 900 Fachbeiträgen und insgesamt ca. 8.000 Seiten und ist damit eines der umfangreichsten und wichtigsten Werke im Bereich Dichten. Kleben. Polymer. quer durch alle Branchen.

Herausgeber:in

Sandra Kiefer und Karl-Friedrich Berger haben sich mit der ISGATEC GmbH auf das Gebiet der Dichtungs-, Kleb- und Polymertechnik spezialisiert.

Die ISGATEC® GmbH (**I**nternational **S**ealing, **G**asket and **A**dhesive **Tec**hnology) ist seit 2002 kompetenter und themenfokussierter Wissensmanagement-Dienstleister im Bereich **Dichten. Kleben. Polymer.**

ISBN: 978-3-946260-05-09

Weitere Bücher zum Thema:
www.isgatec.com