FRINGE ANALYSIS IN HOLOGRAPHY WITH BSO APPLICATIONS

H. J. Tiziani, Institute of Applied Optics,
University of Stuttgart
Pfaffenwaldring 9, 7000 Stuttgart 80, West Germany

1. Introduction

Interferometry, holography, speckle and moiré techniques are becoming useful tools for precision measurements in research and for industrial applications. Computer analysis is increasingly important for the fringe analysis. The use of solid state detector-arrays, image memory boards together with micro-processors and computers for the extraction of the information from the interferograms find important application in optical metrology. Much more information can be extracted from the interferograms leading to higher sensitivities and accuracies.

The fringe analyzing procedures including fringe peak detection and fringe order determination are tedious and time consuming. Automatic fringe analysis and precision phase measuring techniques are very important for applying interferometric, holographic, speckle and moiré techniques in industry. Automatic quantitative evaluation of interferograms requires accurate interference phase measurements independent of fringe position and intensity variations, superposed onto the interferograms. For the fringe analysis, static or dynamic methods can be used. More frequently dynamic techniques are applied, where phase shifting or heterodyne techniques lead to efficient automatic fringe analysis methods.

Fringe analysis together with video electronic processing lead to a resolution in the fringe interpretation from 1/100 of a fringe with phase shifting to 1/1000 with heterodyne-techniques. However a more sophisticated electronic equipment and mechanical scanning of the fringe pattern are required.

For engineering applications it is desirable to have real time techniques in interferometry, holographic interferometry as well as for speckle applications. Thermoplastic material is frequently used for the hologram storage in engineering applications. Photorefractive crystals are found to be useful for real time holography and speckle applications. In speckle interferometry, video techniques can be applied to record and analyse the speckle patterns. In the following discussion methods are described together with some applications partly from our laboratory.

2. Principle and procedure of automatic fringe analysis

Digital interferometry provides means for obtaining very precise measurements at rapid rates. For the fringe analysis many different methods are applied. They can be classified into static and dynamic methods. [1 - 8]

From the fringe analysis with static methods a tilt is often introduced to avoid closed fringes. By contrast for fringe analysis with dynamic techniques some modifications in the experimental set up are required such as a phase shifting facility.

The fringe centers can be found manually and by using a digitizing tablet as well as by using video- and image processing techniques. To estimate fringe peaks, the fringe density binarization technique is commonly used in many fringe analysis systems because of simple algorithms. The gray level method, where local variation of fringe density is considered, is sensitive to noise, but can detect peaks by processing local areas smaller than those in the binary case. In order to extract fringe peaks in the grey level method, it is very important to diminish the influence of noise, including speckle noise. A simple and effective way is unweighted averaging.

For the fringe analysis with dynamic techniques different methods are used:

- phase shifting in three, four, five or more steps or continuously
- heterodyne
- phase-lock.

Most frequently the fringe shifting method is applied where at least three phase shifts of 90 or 120 degrees for instance are introduced. The fringe patterns are stored and subtracted appropriately. [2 - 8]

3. Engineering Applications of Holographic Interferometry

The major applications of holographic interferometry are in measuring mechanical displacement, vibration, stress and deformation as well as for contouring. Depending on the application, different techniques were developed. Double exposure, multiple and time average exposure techniques were introduced, as well as beam modulation and stroboscopic exposures. In addition, fringe localizations together with fringe pattern analyses in three dimensional space have been investigated. By 1970, published material was available predicting the object motion from the fringe pattern. Methods were established to extract vectorial

object displacements from the fringes, their parallax and their localization required in their applications. The search for simpler techniques for fringe analysis in holographic interferometry initiated various studies. The theories developed so far simplify the analysis and make it easier for the engineer to understand and apply it. Sometimes, however, they are too difficult to be of practical value for threedimensional engineering problems but they can be very useful for special applications. [9 - 10]

In recent years, matrix methods and tensor calculus have been introduced for fringe analysis, leading to a number of strain analysis techniques. Phase detection has been significantly improved to one part in 100 to 1000 by phase measuring and heterodyne interferometry. Contourline-holography with automatic fringe analysis can lead to a powerful tool for engineering applications. Now at last, holographic interferometry is beginning to show its true potential in structure metrology. As an example the fringe analysis of a rotating care tyre using a combination of two techniques will be discussed.

The analysis of deformation, stress and vibration of rotating objects requires unwanted rigid body rotation to be eliminated while preserving the information about the elastic object deformation. Methods are stroboscopic, rotating plate- and image derotated holographic interferometry.

Image derotation is the most promising approach for the study of rotating objects with holographic or speckle techniques.

Image derotation occurs when the image of the rotating object is passed through, or reflected by, a prism rotating at half the rotational speed of the object, thus cancelling out the rotational motion [11] . A Q-switch double-pulse ruby laser was used to produce a double exposure hologram of the rotating object.

An experimental set-up used for image-derotated holographic interferometry is shown in fig. 1. Light from the double-pulse ruby laser is divided by a beam splitter and illuminates the object via a second beam splitter. The reflection of the object passes through the derotator prism to interfere with the reference beam on the holographic plate and forms an image-plane hologram. For the alignment it is important that the axis of the derotator is collinear to the rotation axis of the object, otherwise optical-path length differences will produce bias fringes between the two laser pulses. The exact 2:1 ratio between the object and prism speed is achieved by mounting an encoder disk on the drive shaft of the object and relaying its signals to an electronic unit controlling the speed of the servo motor.

In an application the noise and vibration of rotating car tyres were investigated. Fig. 1 shows the experimental arrangement with a derotator and double pulse ruby laser. Fig. 2 shows a typical analysed fringe pattern with lines of equal velocity obtained by pulse separations of 10 µs at $n = 320\ min^{-1}$ and a pulse width of 40 ns.

For noise analysis, a frequency analysis of the vibration is required. A heterodyne technique was used for the analysis of the amplitude and the frequency of vibration at one or several points. An arrangement similar to the one to be described in fig. 10 was used. In addition this facilitates fringe analysis of holographic interferometry. The two methods can therefore be used in parallel, the heterodyne technique for the analysis of the vibrations at a given point and the holographic interferometry for the analysis of the spatial amplitude distribution of the vibration with reference to the movements at a single point as indicated in fig. 1.

4. Holographic interferometry in quasi real time

The storage media used for holographic interferometry are mainly photographic materials based on silver halide. Alternatives are photoresists, dichromated gelatine, photochromic or thermoplastic materials, or photorefractive electrooptical crystals. Thermoplastic storage material is frequently used in holographic interferometry.

Photorefractive materials such as lithium niobate ($LiNbO_3$), potassium niobate ($KNbO_3$), barium titanate ($BaTiOv_3$), strontium barium niobate (SBN) and bismuth silicon oxide ($Bi_{12}SiO_{20}$) are attractive new candidates for real-time optical data processing. Reversible holographic storage was first demonstrated in $LiNbO_3$. More recently, $BaTiO_3$, and $BiSiO_{20}$ (BSO) and $Bi_{12}\ GeO_{20}$ (BGO) were applied for the storage of holograms and speckle patterns. [12, 13]. Photorefractive crystals can be used for real time metrology using holography in a two or four wave mixing arrangement. We use very often BSO-crystals in our laboratory because the BSO is known to be a relatively fast photorefractive material, but with a relatively small electro-optic coefficient. [12,13]. By contrast, $BaTiO_3$ has larger electro-optic coefficients and is highly efficient, but responds slowly. We will now concentrate on the application of BSO as holographic storage material.

Electrooptic and photoconductive materials like BSO crystals allow the recording of phase volume holograms through the photorefractive effect. The storage material can be applied for double exposure and time average holography as well as for speckle photography. It is useful to bias the material by a transverse electric field E_o. Illuminating the BSO with holographic fringes, a photoinduced space-

charge density due to the difference between the distribution of trapped electrons and trapped holes is generated. The created resultant space charge field modulates the refractive index through the linear electrooptical effect. A phase volume hologram is created. Furthermore, it was shown that the maximum energy transfer is obtained when the incident fringe pattern and the photoinduced index change are shifted by $\pi/2$. An efficient intensity redistribution can be obtained with the BSO when the crystal or the fringes are moved at constant speed. The induced additional phase shift enhances the amplitude of the stationary $\pi/2$ shifted component of the grating which causes the beam coupling. Therefore image amplification can be obtained.

The BSO can be very useful for some applications in holographic interferometry and phase conjugation.

For holographic interferometry in quasi real time one hologram of the object to be studied is stored in the crystal as shown in fig. 3. Shortly after the deformation has taken place, a second hologram is stored and reconstructed together with the first one. Interference fringes occuring in quasi real time are used to measure the wavefront deformation between the first and second exposure. For the analysis of the fringe pattern, phase shift techniques as described are very useful. For harmonically oscillating objects, holograms can be recorded when the object is oscillating. By reconstructing the stored, time averaged hologram, the vibration amplitude can be analysed.

For contour line holography in quasi real time a BSO crystal can be used as storage material. [13,14]. There are different ways to form contour fringes that are contours of constant range of depth. The object can be illuminated with two wave-lengths simultaneously; illumination with one wavelength but from two directions; or with one wavelength but with a medium of different indices of refraction surrounding the object. We prefer a two wavelength technique for the quasi real time contour holography with BSO. [14]

An application of our quasi real time holographic deformation measurements will be discussed briefly. To study the curing glue, double exposure holograms were recorded in an experimental set up shown schematically in fig. 3. Immediately after the second exposure the hologram is reconstructed and analysed using the phase shifting technique described earlier by moving a piezo driven mirror 6 in the reference beam. After using a flashlight the crystal is ready for the next exposure. In fig. 4 typical fringe patterns photographed from the TV screen taken in intervals of 20 seconds are shown together with contour lines and pseudo 3-D plots.

Fig. 5 shows an arrangement with a BSO crystal as storage material in a two (or three) wavelength real time con-

tour holographic set up. The two λ's of an Ar^+ laser, for instance, were in the reference and object beams simultaneously present. The reconstructing wavelength is selected by the mirror adjusted to work at the appropriate Bragg angle in a four-wave mixing arrangement. L_1 and L_2 image the object onto the BSO. In fig. 6 a typical result of an analysis of a coin is shown with contour line separations of 13 µm.

Fig. 7 shows, as contrast, the holographically recorded and analysed contour lines of a support of a rear car axle with 14 mm contour separation.

A remaining problem to be solved in the future is the adaption of the coordinate system of the contour lines measured optically with a CAD coordinate system.

5. Speckle pattern interferometry

When an optically rough surface is illuminated by a laser a speckle phenomenon occurs; it is a curious granular appeareance. A similar effect occurs in coherent radar and ultrasonic imaging. By an optical rough surface we mean height variation of the order of, or greater than the wavelength of the illuminating light. When such a surface is illuminated by a laser beam, the intensity of the scattered light is found to vary randomly with position.

When a laser-illuminated optically rough object undergoes displacement and / or deformation, the speckles in the image field of the object move in the same way but are accompanied by a change in the structure by larger displacements. Detection of the speckle movements by double exposure techniques leads to speckle photography. In speckle pattern interferometry however, the phase variation in a single speckle is of interest. Because the speckle size can be adapted to the resolution of a TV-system, speckle interferometry becomes an interesting alternative or supplement to holographic interferometry.

In speckle pattern interferometry a reference beam as in conventional holography is usually superimposed onto the speckled object beam and recorded with a TV-camera as shown schematically in fig. 5, where L_3 forms the speckled image of the object onto the photodiods. For a moving object, the intensity in the speckles varies cyclically, corresponding to a path-length change between reference and object beam by a multiple of the wavelength of the laser. [10,15]. The video signal is processed , high pass filtered, rectified and displayed on the TV monitor. The electronic processing can be considered to correspond to the reconstruction in conventional holography where the interference fringe pattern needs to be stored, requiring high resolution. In speckle interferometry the speckle size can in turn be

adjusted by the aperture of the image forming lens in order to be adapted to the resolution of the storage device.

For deformation, displacement or vibration analysis, speckle interferograms of different states are added or subtracted.

The fringe analysis in speckle interferometry is similar to the methods described earlier. Some additional filter operations such as averaging and convolution are needed to clean the speckled fringe patterns.

An experimental arrangement used in our laboratory for speckle pattern interferometry is shown in fig. 8. The phase shifting for the automatic fringe analysis is introduced by the piezo driven mirror S_2 into the reference beam which in turn is coupled into a glass fiber. Fig. 9 a) shows a typical result obtained by subtracting two speckle fields with a deformation between. The analysis of the fringe pattern is shown in fig. 9 a) and 9 b) as contour lines and pseudo 3-D representation, respectively. Care needs to be taken by cleaning the speckled fringes using different filtering procedures.

For vibration analysis at a single or different, separated object points heterodyne interferometry was found to be very useful. In fig. 10a heterodyne set up used in our laboratory is shown. A frequency shift of a few kHz to a few MHz can be introduced into the reference beam by a Bragg cell or a rotating phase grating as used in our particular set up. The object beam is reflected back from the object and superimposed onto the reference beam in the image plane where the detectors are located. The speckle size can be adjusted by the pupil size of the image forming system. For some applications the image forming lens can be replaced by an aperture stop only. An experimental result is shown in fig. 11 where a vibrating membrane is investigated at two points A and B at the same time. At B a disturbance is deliberately introduced. The vibrations of the membrane at the points A and B are shown in fig. 11b without and 11c with a disturbance. The vibration analysis with speckle heterodyne interferometry can of course be carried out at more than two points simultaneously.

6. Conclusion

Progress has been made in the fringe analysing procedures. At last interferometry, holography and speckle techniques are more frequently applied in industry and become a powerful tool for engineering applications. The methods will be even more frequently applied in industry, when they can be applied in real time. In speckle interferometry the speckle size can be adapted to the photoelectric detector.

In nondestructive testing with holographic or speckle techniques, in addition to the automatic fringe analysis the computation of the corresponding deformation and strain needs to be further improved. Furthermore, real time storage materials, rugged and reliable lasers and holographic components are needed to make the holographic methods for nondestructive testing even more attractive for the industry.

The financial support of the DFG especially for speckle interferometry for vibration analysis is acknowledged.

References

/1/ Kreis, Th.: "Digital holographic interference phase measurement using the Fourier transform method". J. Opt. Soc. Am. A 3 (6) pp 847 - 855 (1986).

/2/ Tiziani, H. J.: "Rechnergestützte Laser-Meßtechnik". Technisches Messen, tm, 54 pp 221 - 230 (1987).

/3/ Brunning, J. H.: "Fringe scanning interferometers". Optical shop testing, ed. Malacara, D., John Wiley and Sons, New York (1978).

/4/ Dörband, B.: "Die 3-Interferogramm-Methode zur automatischen Streifenauswertung in rechnergesteuerten digitalen Zweistrahlinterferometern". Optik 60 pp 161 - 174 (1982).

/5/ Brenckmann, B., and Thieme, W.: "Computer-aided analysis of holographic Interferograms using the Phase-shift method", Appl. Opt. 24 pp 2145 - 2149 (1985)

/6/ Schwider, J., Borow, R., Elssner, K. E., Grzonna, J., Spolaczyk, R. and Merkel, K.: "Digital wavefront measuring interferometry; some systematic sources". Appl. Opt. 22, pp 3421 - 3432 (1983).

/7/ Creath, K.: "Comparison of phase measurement algorithmus". Proc. of SPIE 680 (1986)

/8/ Dörband, B. and Tiziani, H. J.: "Testing aspheric surfaces with computer generated holograms; analysis of adjustment and shape errors". Appl. Optics 24, pp 2604 - 2611 (1985).

/9/ Schumann, W. and Dubois, M.: "Holographic interferometry". Springer Ser. Opt. Sci, Vol. 16 (Springer, Berlin, Heidelberg 1975).

/10/ Jones, R. and Wykes, C.: "Holographic and Speckle Inter-

ferometry". Cambridge University Press (1983).

/11/ Fagan, W. F., Beeck, M. A. and Kreitlow, H.: "Practical application of image derotated holographic interferometry to vibration analysis of rotating components". SPIE-proceedings Vol. 36 pp 260 - 266 (1980).

/12/ Huignard, J. P., Herriau, J. P., Aubourg, P. and Spitz, E.: "Phase-conjugate wavefront generation via real-time holography in $Bi_{12}SiO_{20}$ crystals". Opt. Lett. 4 pp 21 - 23 (1979).

/13/ Tiziani. H. J.: "Realtime metrology with BSO crystals". Optica Acta, Vol. 29 pp 463 - 470 (1982).

/14/ Küchel, F. M., and Tiziani, H. J.: "Real time contour holography using BSO crystals", Optics Comm., Vol. 38 pp 17 - 20 (1981).

/15/ Erf, R. K. (ed.) "Speckle metrology". Academic Press, New York (1978).

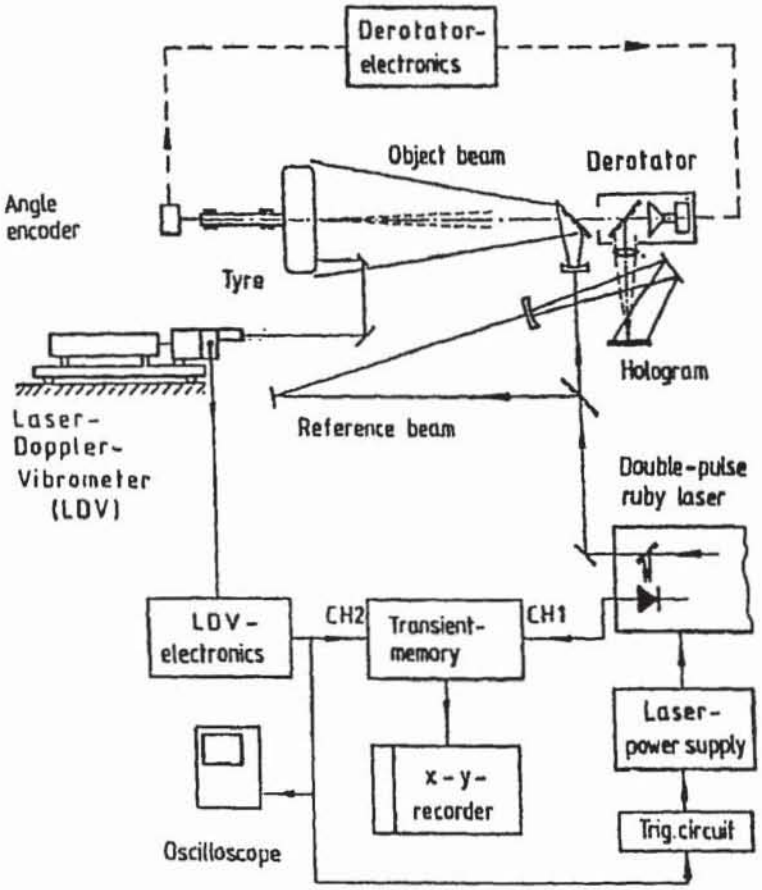

Fig. 1:
Arrangement for double pulse holography for the vibration analysis of rotating car tyres with derotator and laser doppler vibrometer.

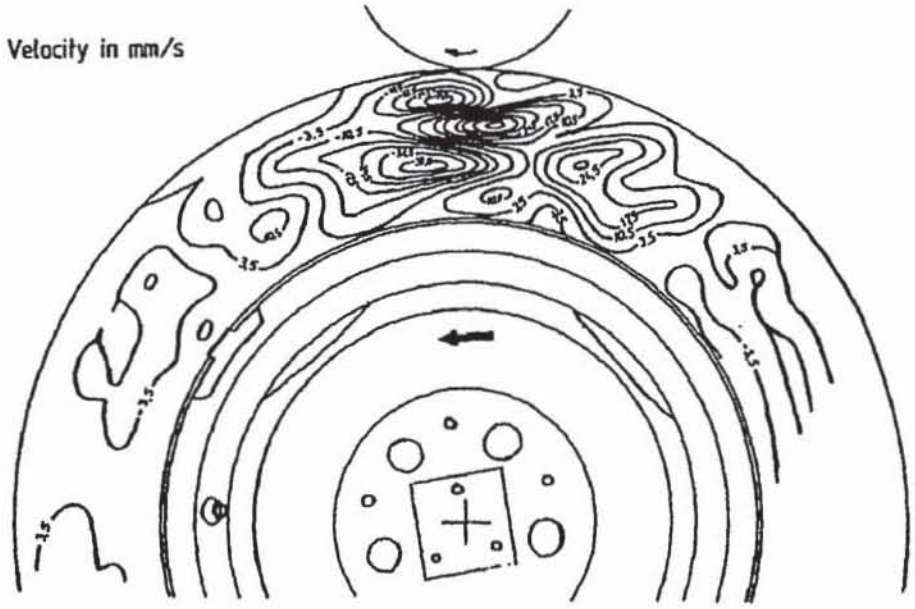

Fig. 2:
Vibration analysis of the side wall of a rotating car tyre. Pulse separation 10 μs, n = 320 min^{-1}, pulse width 40 ns.

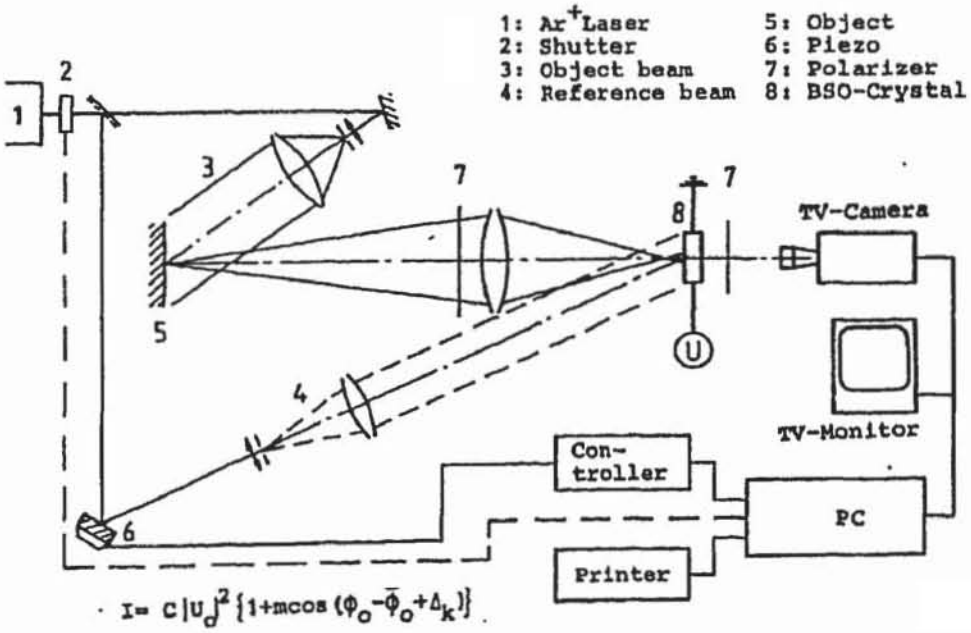

Fig. 3:
Arrangement for holography in quasi real time to study the deformation of the curing glue.

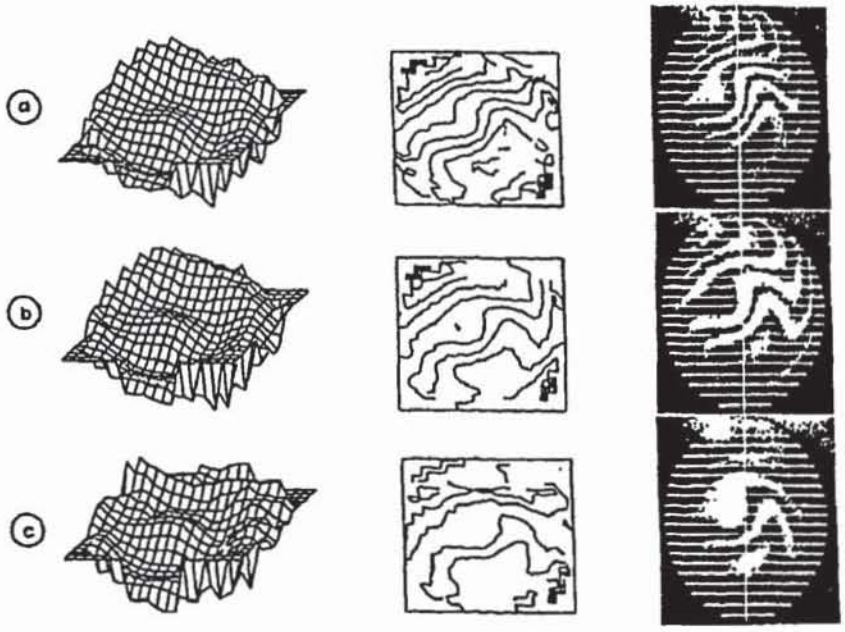

Fig. 4:
Some results of the double exposure holography shortly after the beginning of the curing process at time intervals of 20 seconds. The fringe patterns, right column, were photographed from the TV screen, the contour lines of the deformation and the pseudo 3-D-presentation follow from right to left.

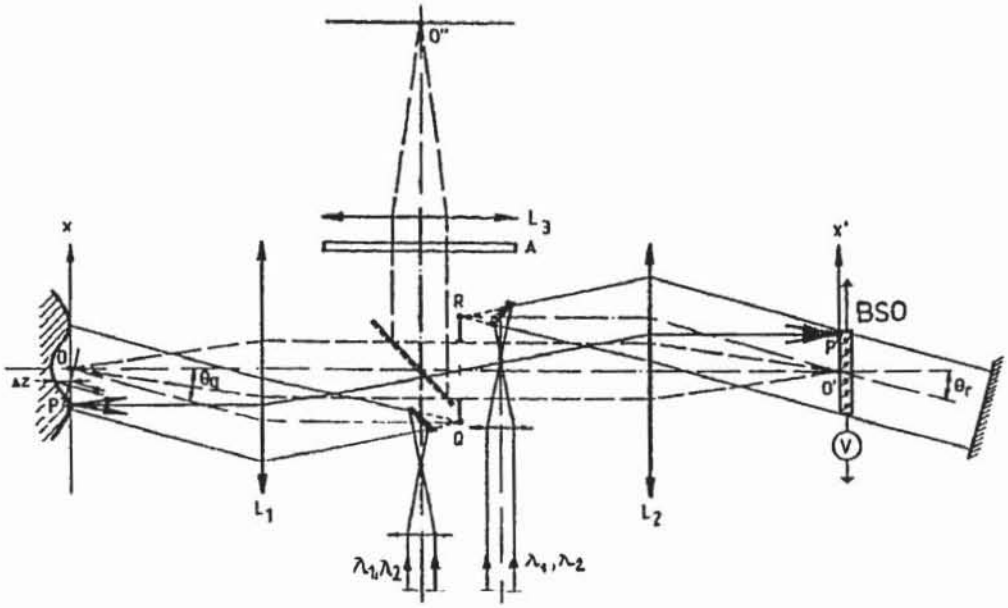

Fig. 5:
Arrangement for obtaining quasi real time contour lines with a 2- or 3-wavelength technique.

Fig. 6:
Contour lines obtained from a metallic coin with a contour separation corresponding to a height variation of 13 μm.

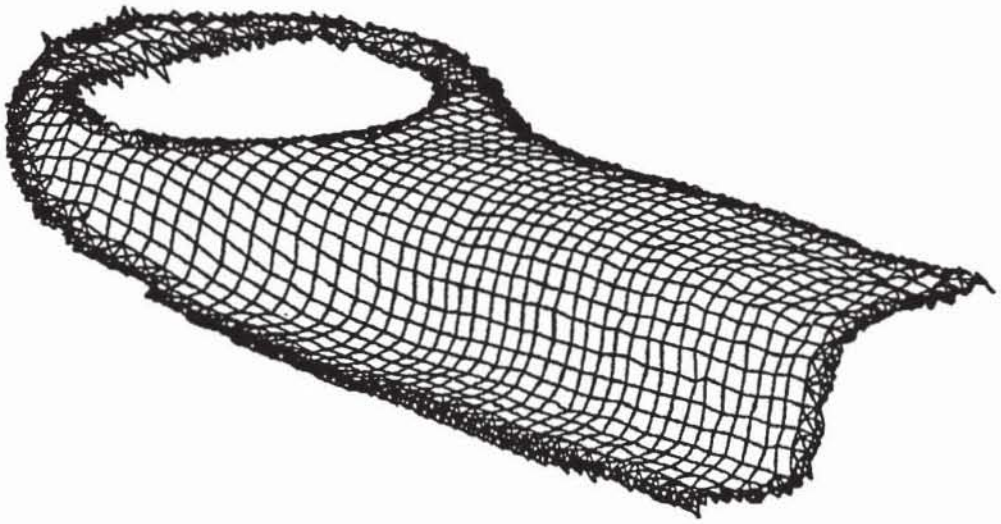

Fig. 7:
Analysis of holographically recorded contour lines of a support of a rear car axle. The contour lines correspond to height variation of 14 mm.

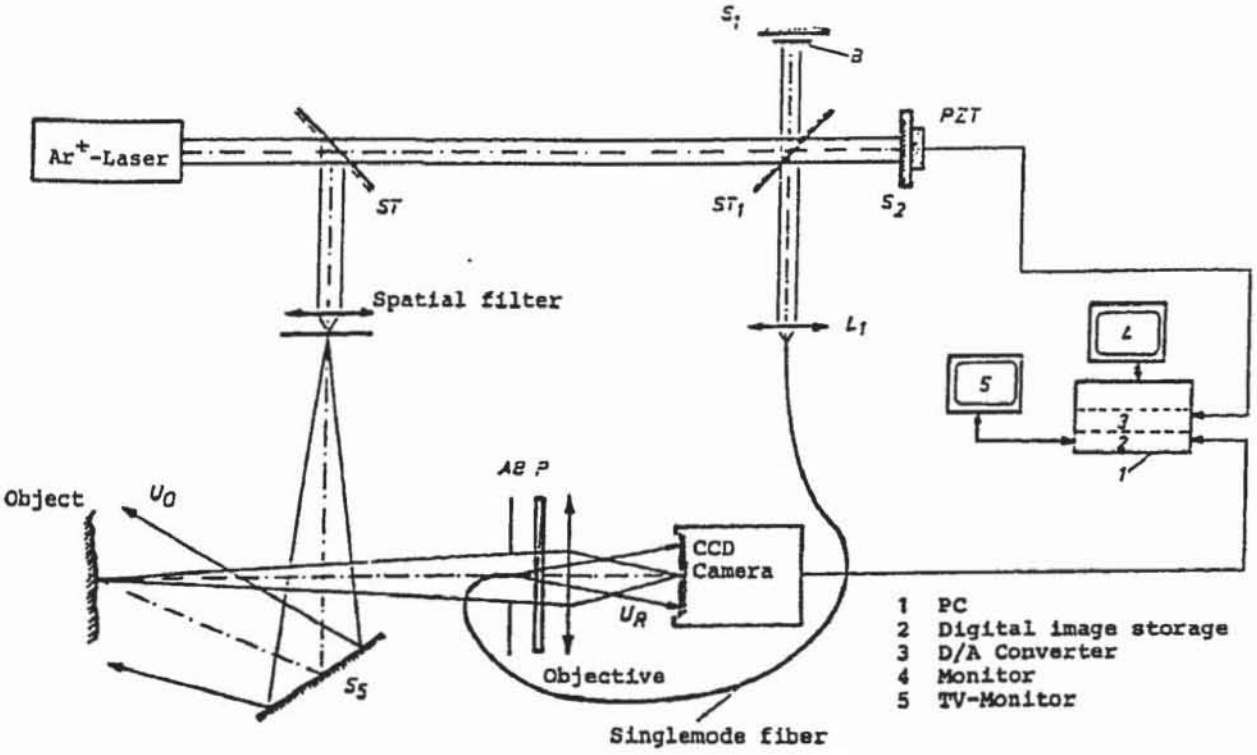

Fig. 8:
Experimental arrangement for speckle pattern interferometry with fringe analysis.

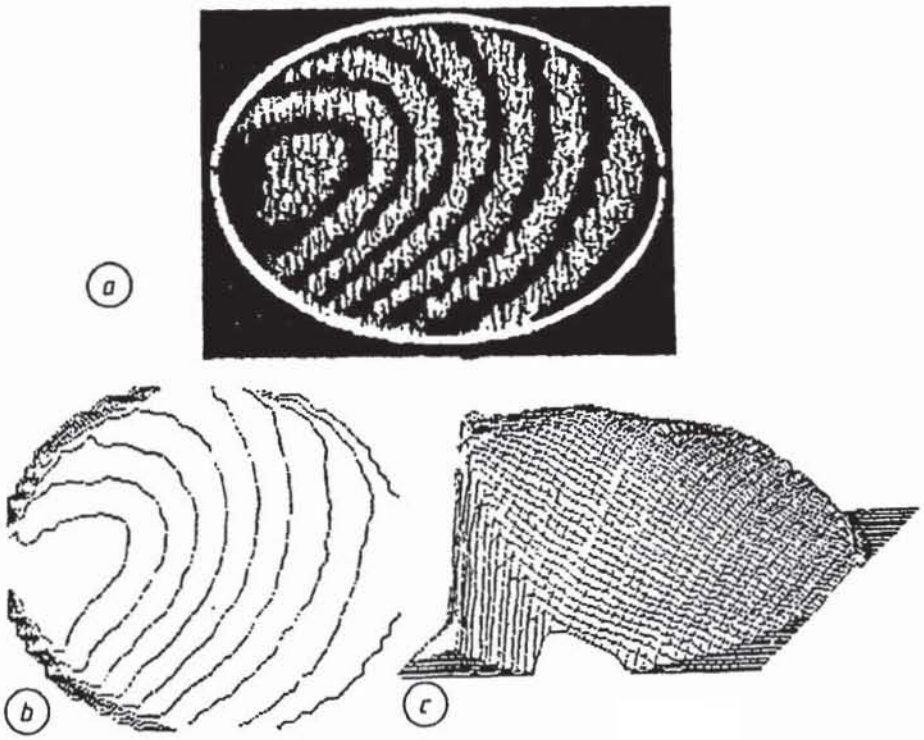

Fig. 9:
Result of a typical deformation measurement with speckle interferometry.
Fig. 9a) Subtraction of two speckle pattern with a deformation between.
Fig. 9b) Appropriate contour lines.
Fig. 9c) Pseudo 3-D representation.

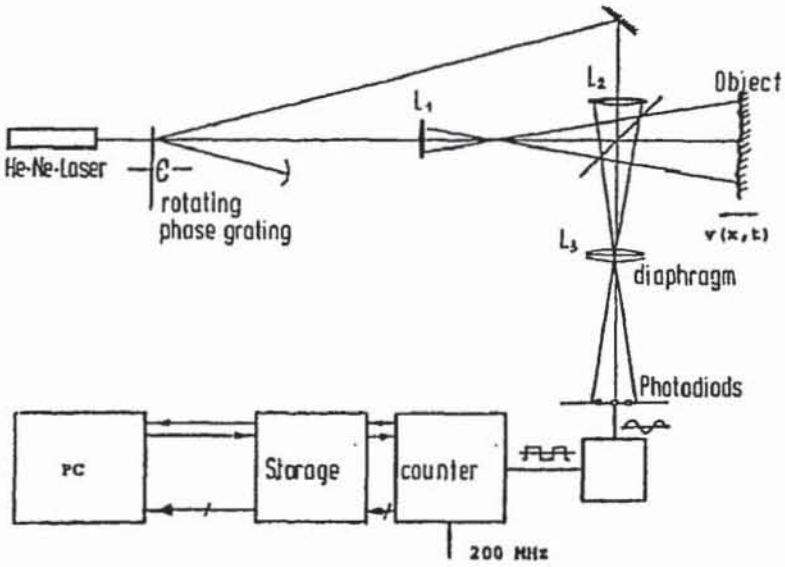

Fig. 10:
Arrangement for heterodyne speckle interferometry.

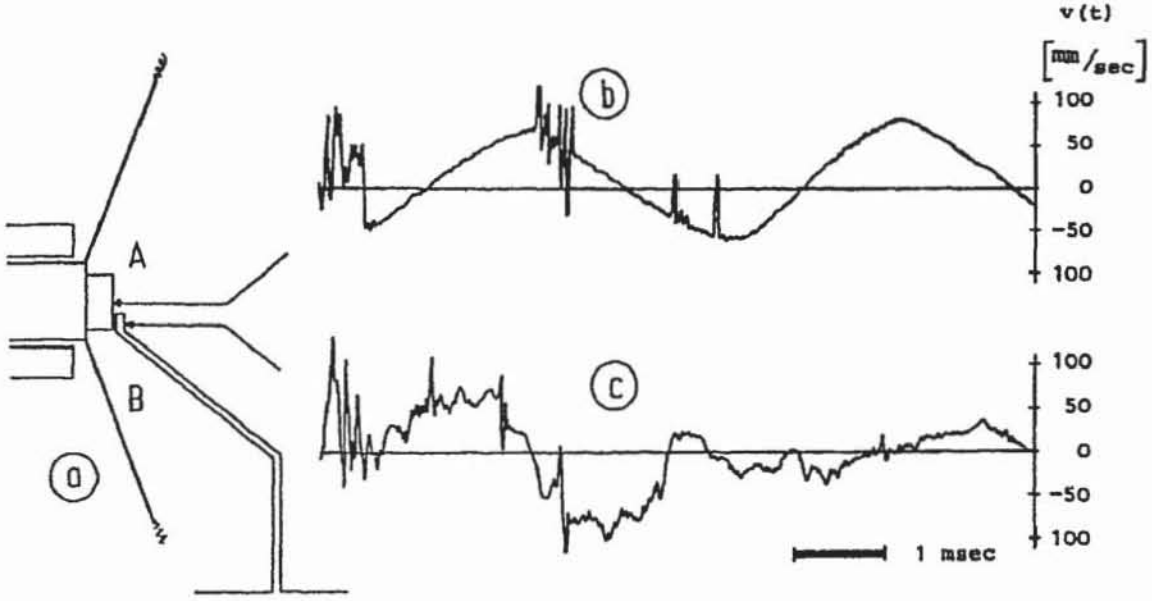

Fig. 11:
Vibration analysis with speckle heterodyne interferometry at different points simultaneously such as A and B in fig. 11a). The corresponding vibrations are shown in fig. 11b) and11c).