Chapter 2

CONNECTION SYSTEMS USED FOR GRID SPATIAL STRUCTURES

2.1 Introduction

From common spatial structures to the latest free-form spatial structures, the connecting system is one of the most crucial points, not only for the accommodation of geometry but also for the local and global stability of the whole structure. The connectors for these structures are more complicated than ordinary framing systems because more members are connected to a single joint and the members are positioned in a three-dimensional space, which may cause complexities in the mechanism of force transfer [Lan 1999]. In addition, assembling and geometrical procedure should be well accommodated not only to save cost and time of construction but also to adjust the building site as effectively as possible.

To provide proper solutions in connection systems on the spatial structure considering structural and geometrical requirments, many companies and researchers have provided different types and forms in the past decades. One of the related sources reported that over 250 different types of connecting systems have been suggested or used in practice, and there are around 50 commercial firms which have tried to specialize in the manufacture of proprietary connection systems for spatial structures [Lan 1999], each with its own types and forms that are difficult to compare.

Since the early age of architecture, designers have tried to describe the details of jointing, and the type of jointing depends mainly on the connecting technique, whether it is bolting, welding or applying special mechanical connectors (Figure 2.1). For instance, the Eiffel tower, which was built in Paris for the 1889 exhibition by the French engineer Alexandre Gustave Eiffel, demonstrates the complexity of a

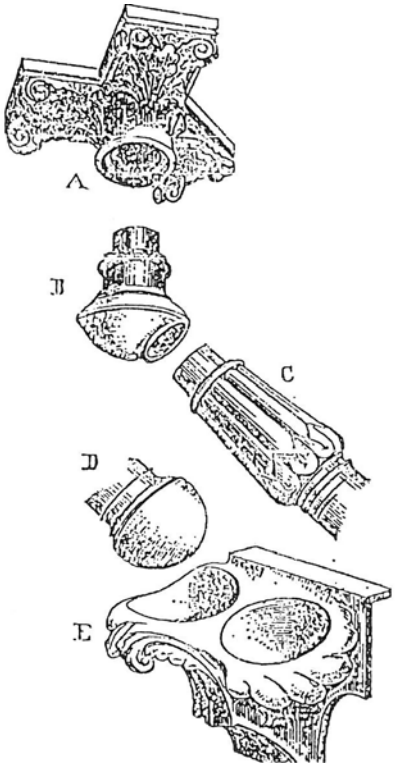

Figure 2.1:
Details of joint and strut described by a French architect Violet-le Duc [Makowski 2002]

three-dimensional joint in the age of gusset plates and riveting (Figure 2.2). In the mid-20th century, Konrad Wachsmann designed various nickel steel node connectors, as shown in Figure 2.3, which were partially welded, used for long spanned spatial structures, such as a aircraft hangar projects [Rudolf 1988]. It is likewise influenced by the shape of the members. This usually involves a different connecting, depending on whether the members are circular or square hollow sections or rolled steel sections. Table 2.1 through 2.3 show comprehensive summeries of the jointing systems. All the connection systems in these tables can be divided into three following main catagories:

Figure 2.2:
Connection details of Eiffel tower [Casas 2003]

- with a node,
- without a node,
- with prefabricated units

Based on the tables and previous research, it is necessary to mention the most popular prefabricated connecting systems in order to understand details in the connections. Most of all, it is very meaningful to identify and compare the characteristics of connection systems which are used in spatial and free-form structures and to detect their influence on the structural integration of the system. Thus, in the next section, more detailed characteristics of various connection systems will be mentioned.

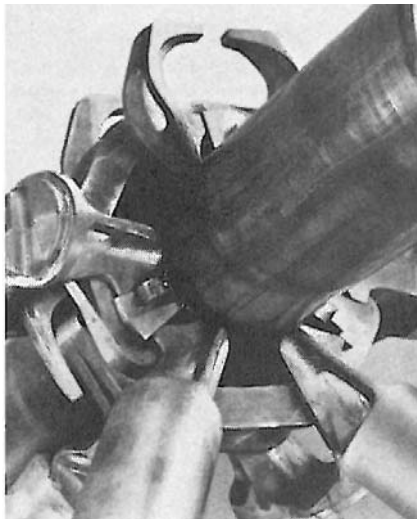

Figure 2.3:
Mobilar node connector detail of Konrad Wachsmann [Rudolph 1988]

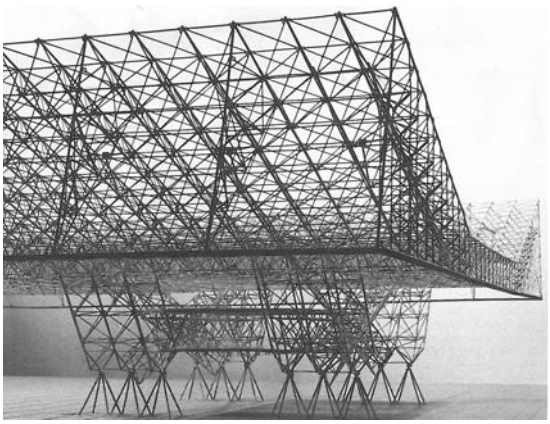

Figure 2.4:
Aircraft hangar designed by Konrad Wachsmann [Rudolph 1988]

Connection Types with a Node

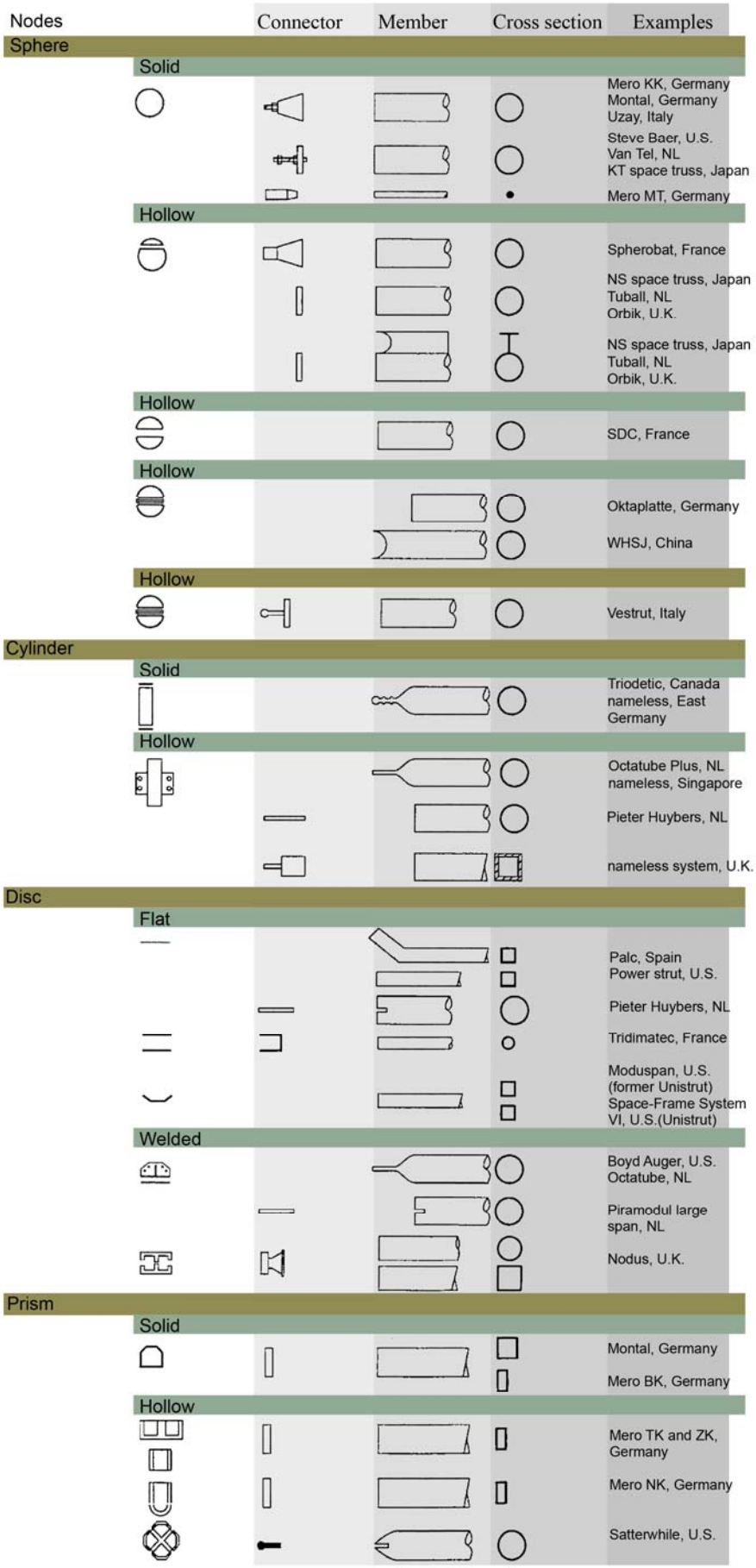

Table 2.1:
Connecting types with nodes
[Gerrits 1996][Lan 1999]

Connection Types without a Node

Node	Connector	Member	Cross section	Examples
Form of member				
Forming				
				Buckminster Fuller
				Nonadome, NL
Flattended and bending				
				Radial,Australia
				Harley,Australia
Addition of member				
Plate(s)				
				Mai Sky, U.S.
Member end				
				Pieter Huybers, NL
				Pierce, U.S.
				Buckminster Fuller

Table 2.2:
Connecting types without nodes [Gerrits 1996][Lan 1999]

Connection Types with Prefabricated Units

Node	Prefabricated unit	Member cross-section top / bracing / bottom	Examples
Geometrical solid			
			Space deck, U.K.
			Mero DE, Germany
			Unistrut, France
			nameless system, Italy
2D Components			
			Mai Sky, U.S.
			nameless system, Italy
3D Components			
			Cubic, U.K.

Table 2.3:
Connecting types with prefabricated units [Gerrits 1996][Lan 1999]

2.2 Connection systems for double layer space structures

The Mero system

The connection system Mero, which was introduced in 1942 by Dr. Mengeringhausen, has been very popular and has been used for numerous industrial buildings, churches, assembly halls and domes. The connecting system is made of tubular members with threaded ends which are connected to a steel sphere node with tapped bores to fill up eighteen members. Bolts are tightened by means of a hexagonal sleeve and dowel pin arrangement (Figure 2.5). The manufacturer can produce nodes of different size with diameter ranging from 46.5 mm to 350 mm, and the corrsponding bolts are M12 to M64 with a maximum allowable force of 1413 kN. The Mero connection has the advantage that the axes of all members pass through the center of the node, eliminating eccentricity loading at the joint; therefore the joint is only under axial forces. Tensile forces are then carried along the longitudinal axis of the bolts and resisted by the tube members through the end cones [Lan 1999] [Makowski 2002]. The size of the connecting bolt of compression members, based on the diameter estimated from internal forces, may be reduced by 6 to 9 mm. The diameter of a steel node may be determined by the following equations [Lan 1999] [Chen et al 2005]:

$$D \geq \sqrt{\left(\frac{d_2}{\sin\theta} + (d_1 \cot\theta + 2\xi d_1)\right)^2 + \eta^2 d_1^2} \tag{2.1}$$

To satisfy the requirements of the connecting face of the sleeve, the diameter should be checked using the following equation [Lan 1999] [Chen et al 2005]:

$$D \geq \sqrt{\left(\frac{\eta d_2}{\sin\theta} + (\eta d_1 \cot\theta)\right)^2 + \eta^2 d_1^2} \tag{2.2}$$

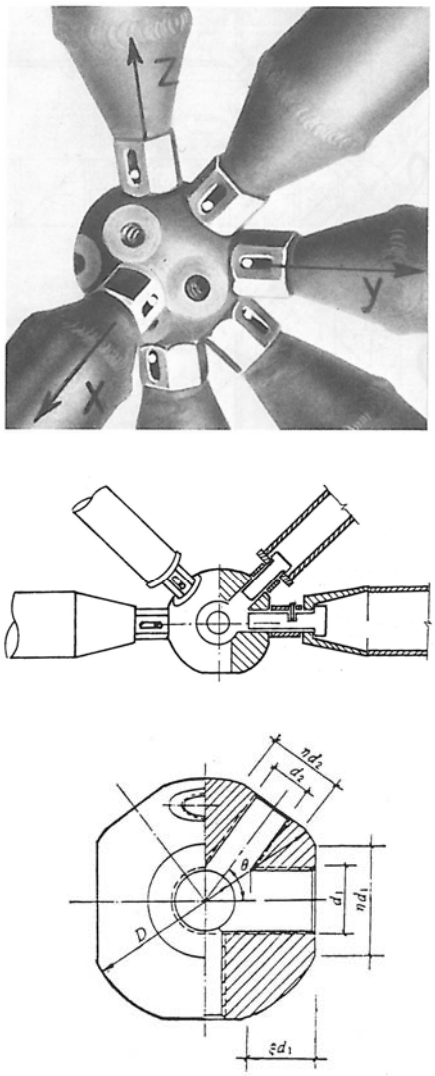

Figure 2.5:
Dimensions of spherical node of Mero system [Borrego 1968][Lan 1999]

where

D = diameter of steel ball (mm)

θ = the smaller intersecting angle between two bolts (rad)

$d_1 d_2$= diameter of bolts (mm)

ξ = ratio between the inserted length of the bolt into the steel ball and the diameter of the bolt

η = ratio between the diameter of the circumscribed circle of the sleeve and the diameter of the bolt

The value of ξ and η may be determined by the design of tension or compression bolt strength, but the values are 1.1 and 1.8, respectively.

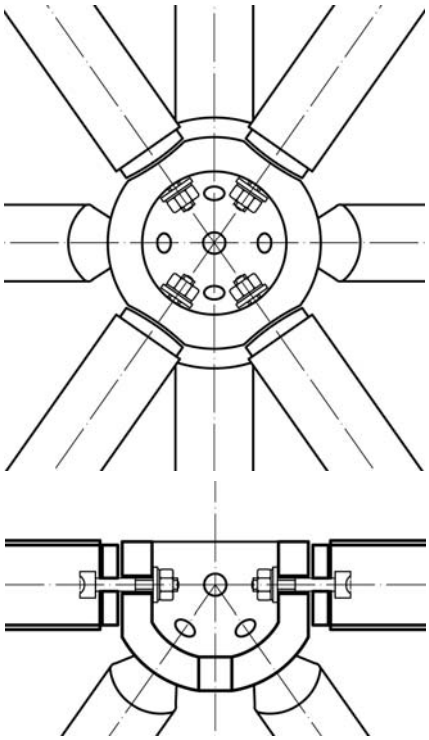

Figure 2.6:
Details of bowl node developed by new Mero system (type NK) [Lan 1999]

Bowl node (type NK)

Figure 2.6 shows the bowl type of node which consists of a hemispherical node connecting top chord and diagonal structural members. To connect the node and member, a single bolt is generally used. The top chord members are square or rectangular sections and can be loaded in shear and are fitted flush to the nodes. Bowl nodes are used for double layer curved surfaces, in particular irregular plan or pyramid shape. The diagonal and lower chords are constructed in an ordinary Mero system with circular tubes and spherical nodes [Lan 1999]. This node connector was

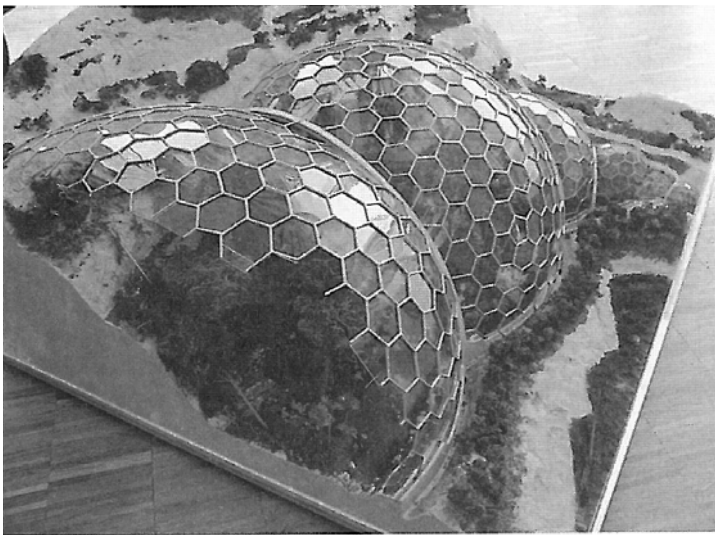

Figure 2.8: Geometry of Eden project, England [Knebel et al 2001]

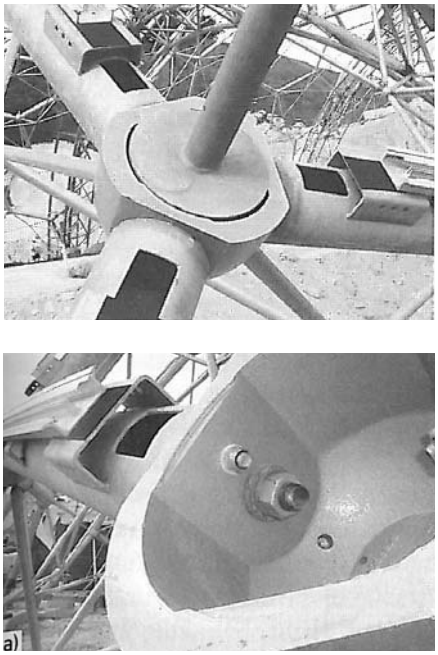

Figure 2.7:
Details of bowl node connector for Eden project, England [Knebel et al 2001]

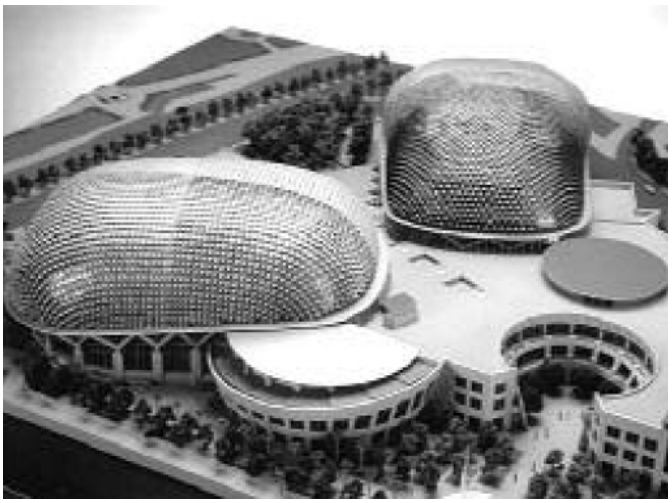

Figure 2.9: Esplanade theatres in Singapore [Klimke et al 2002]

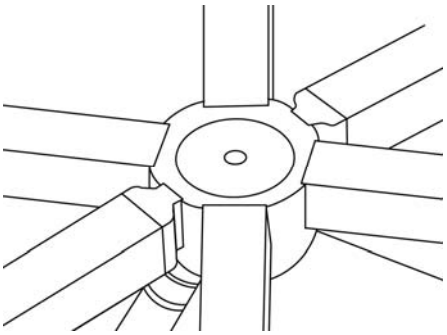

Figure 2.10:
Detail of connection system for esplanade theatres in Singapore [Klimke et al 2002]

used for the roof design of the Eden project, England (Figure 2.7 and 2.8) and the free-formed envelopes for the esplanade theatres in Singapore (Figure 2.9 and 2.10).

The Space Deck system

Around 40 years ago the connecting system Space Deck was introduced in the United Kingdom. It was almost completely used for industrial space frames and factories by repetitive application of units. The basic unit is an inverted square on a base of pyramid shaped units with an angle top tray and four diagonal or bracing members. The units are interconnected by bolting their top layer members and interconnecting the lower chord node points by means of high tensile steel tie bars (Figure 2.11) [Borrego 1968].

The Space Deck system is used with members of less than 40 m span with a standard module depth of 1.2 m. The minimum structural depth is 0.75 m. In order to take a higher design load with a large span, alternative modules of 1.5 m and 2.0 m are applied using the same depth.

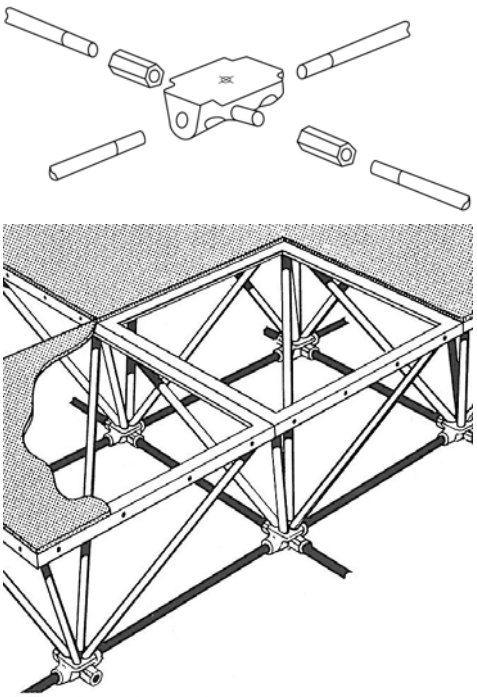

Figure 2.11:
Detail and application of Space Deck system [Borrego 1968]

The PYRAMITEC system

After the Space Deck system was introduced to the space frame structures, the idea of prefabricated pyramidal units has been further developed by many other designers, although the details of the connections were different. The PYRAMITEC connection system, which the French desig-

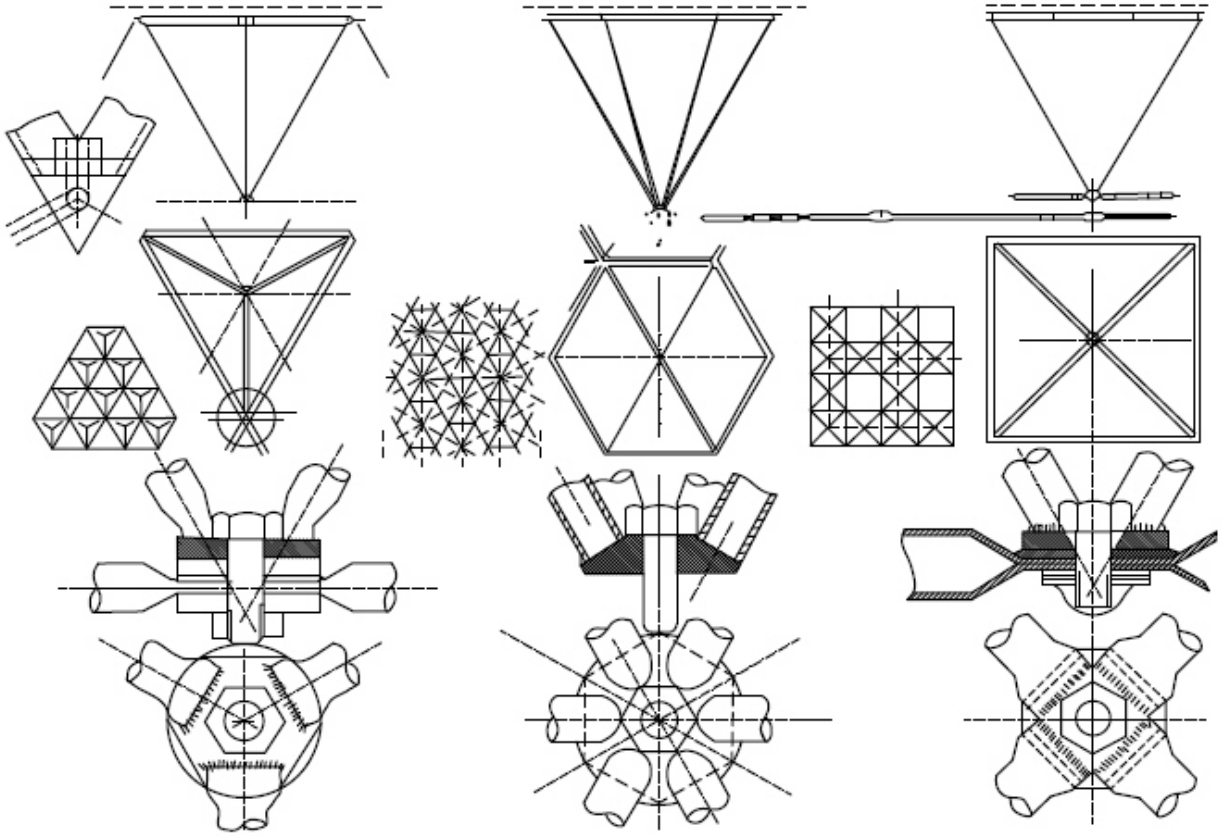

(a) Triangular base (b) Hexagonal base (c) Square base

Figure 2.12: Three basical configurations of PYRAMITEC system grid [Makowski 2002]

ner M. S. Du Chateau developed, is one of the examples of this. This system consists of prefabricated three-dimentional pyramids. The pyramids consist of welded frames made of steel angles with steel tube diagonals connecting to an apex piece, which in turn receives the adjustable tie bars [Borrego 1968]. While the Space Deck systems is using only the square-based pyramids, the PYRAMITEC system employed triangle based pyramids as well as hexagonal based pyramids (Figure 2.12).

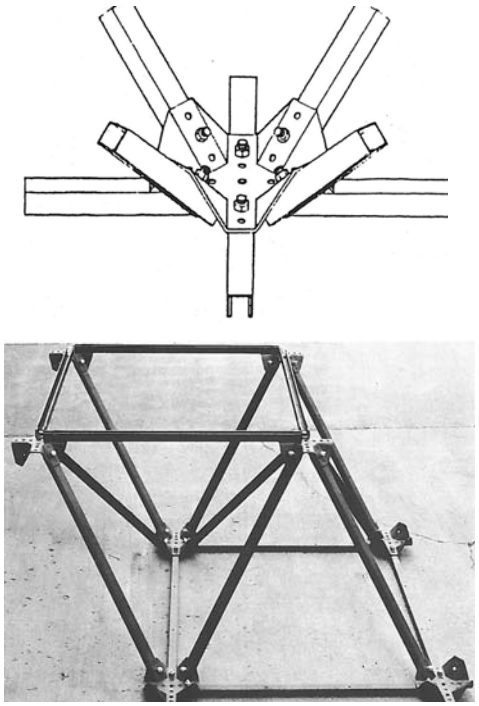

Figure 2.13:
Details and prototype of UNISTRUT system [Borrego 1968]

The UNISTRUT system

Developed in 1955 by Charles W. Attwood with the help of the Engineering Research Institute of the University of Michigan, the UNISTRUT connector consists of pressed steel plate produced automated in a special tooling machine, ensuring an extremely high precision in manufacture

and very low cost though mass production. The structures of UNISTRUT are usually composed of framing struts, all of the same length for top and bottom layers as well as the diagonals. The struts are connected at the center of the joints by only one bolt to the specially shaped pressed-steel plate (Figure 2.13) [Makowski 2002].

The Triodetic system

The node connection system Triodetic was developed by a Canadian company S. Fentiman. It consists of an extruded aluminium node connector hub with serrated keyways. As shown in Figure 2.14 and 2.15, the end of each member is manufactured to be inserted into the hub. This connection system was originally developed only for aluminium structures, but Triodetic framing is now available in galvanized steel, stainless steel, mill finish aluminum or anodized aluminum. Each variety serves special service environments. Factory finishes include polyester, powder-coating, chromating and kynar, offering a range of added aethetics and durability.

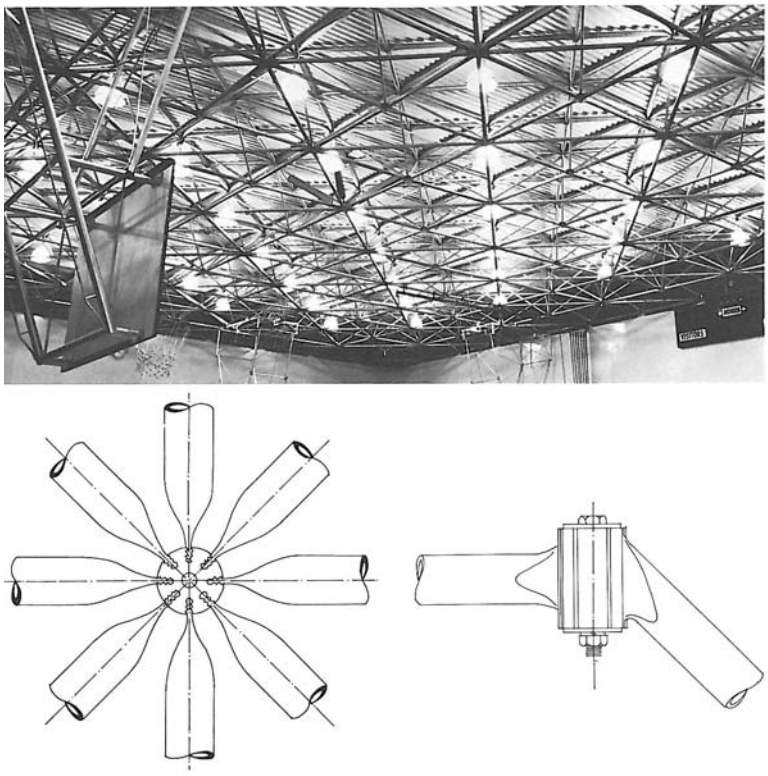

Figure 2.14:
Application and details of Triodetic system [Borrego 1968]

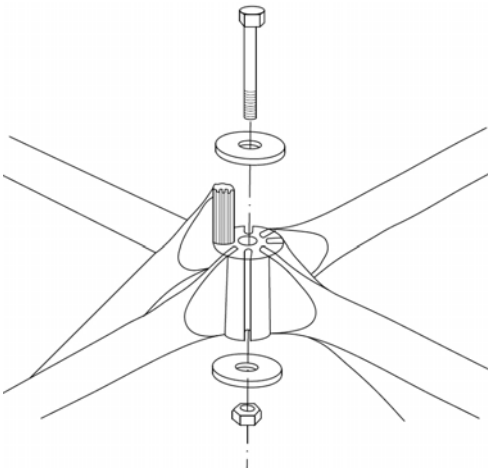

Figure 2.15:
Detail of Triodetic system [Makowski 2002] [Borrego 1968]

The majority of structures utilize powder-coated galvanized steel or anodized aluminum for most environments including salt and chlorine atmospheres. Stainless steel is required for highly corrosive conditions (e.g. potash processing). As a result, steel space frames could be erected without any electrolytic difficulties [Makowski 2002].

As for the transmission of inner force, the tube section dimension at each connection is increased in the plane of maximum bending, and the tight keyway connection in the node prevents slippage, providing increased bending strength with no loss of axial capacity. To resist the rotation about the minor stress plane, simultaneous failure mode of all members at the connection would be needed, which is physically impossible given that they radiate at different angles, carry different loads and in many cases have different section property [Borrego 1968].

The MURJ-3D System

In order to consider modular, universal and reconfigurable connecting characteristics, the Department of Mechanical Engineering at the University of Southampton, England, developed an experimental node jointing system MURJ-3D in 1996. This system is constructed of four basic components, namely cube, post, arch and runner (Figure 2.16). Commencing with the Cube, a Connector Block is added to it by means of two screws which will transmit tension and compression loads. As many Runners as required may then be added to the octant, moved into position, and then secured. The enclosed “surface” of the basic octant is bounded by a spherical triangle – thus, the Runner, which is concentric to the octant, may be traversed anywhere over the surface of the spherical triangle [Bardell et al 1997].

After sizing exercises were finished, comprehensive test programs of both static and cyclic fatigue loading were performed to verify that the joint possessed enough strength and endurance to be implemented in

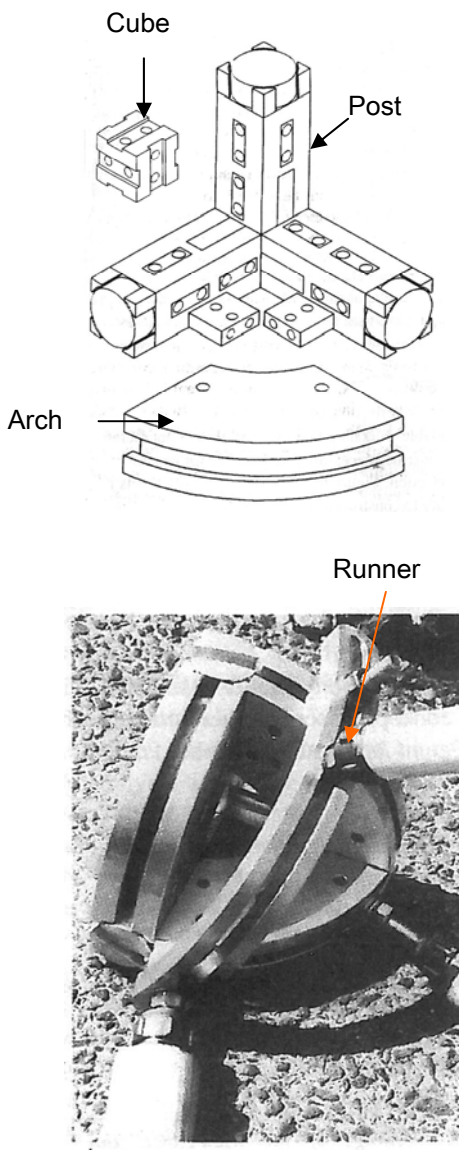

Figure 2.16:
Detail of MURJ-3D system
[Bardell et al 1997]

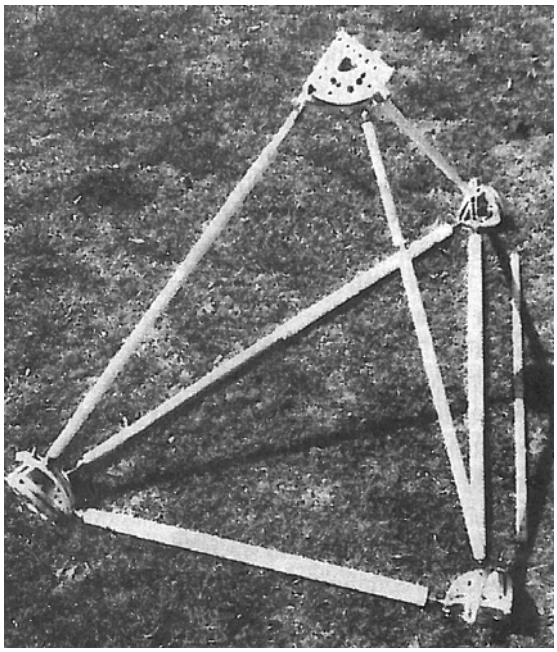

Figure 2.17:
Prototype of MURJ-3D system [Bardell et al 1997]

an real space-frame structure. In one typical loading test, for example, the suggested model was configured as a single octant bisected by the Runner. A tensile test of 5 kN was gradually introduced (over a 30 second interval) through the mid-point of the Runner (θ=45°). The load-displacement behavior is linear stiffness progress with 4 mm at 5 kN [Bardell et al 1997].

The UNIBAT System

About 25 years ago, the French connecting system UNIBAT was developed by S. du Chateau. This connection system consists of modular pyramidal units that are bolted only at their corners to the following units using high tensile bolts. Their lower layer is provided by tubular members which are flattened at the nodes and jointed to the pyramids by only one vertical bolt [Makowski 2002]. In fact, the UNIBAT had no prefabricated standard joint and thus was not limited by normal constrains imposed by the connector as to plan form or architectural layout. It could be used in various types of structural sections, hollow sections or rolled sections, seperately or combined. The clear spans possible with the UNIBAT system are not limited as they usually are

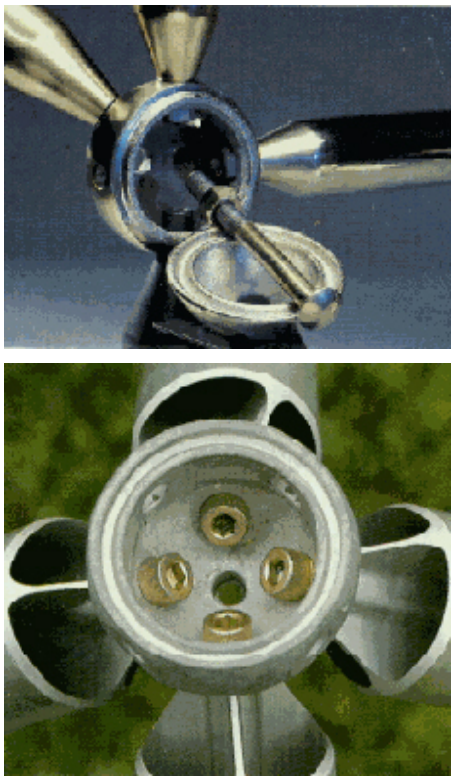

Figure 2.18:
Details of UNIBAT system [Makowski 2002]

in other systems, i.e. by the node connector, but simply by the maximum size of structural section available (Figure 2.18). Theoretically, UNIBAT can be used for double– or multi-layer structures.

The NODUS System

The Tubes Division of the British Steel Corporation introduced the nodal system NODUS in 1972. This joint system is a typical example of a mechanical connector. In the center of connector, there is a body divided into two half cased enclosures that are combined by a high strength friction bolt.

The bolt head is accommodated in a hexagonal recess in one half casing, thus leaving the exterior of the joint flush with the outside of the chord member so that cladding can be fixed directly onto the chords. The half casting has four drilled lugs for connecting to the diagonal members, which intersect usually at 45 degree angle to the chords, by means of the appropciate half castings. The horizontal chord members are butt welded to connectors having circular rings which close into corresponding grooves in the half casings [Makowski 2002]. The ends of the bracing members are fabricated with forked connectors which can be connected to casings lugs by a fork pin protected with split cotter pins. In order to create a seal between the half casings a gasket is inserted in the casings and is clamped with the central bolt, which is screwed with a specific torque value (Figure 2.19).

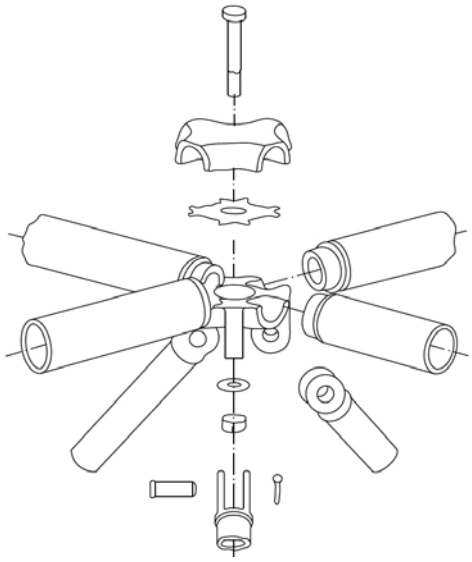

Figure 2.19:
Detail of Nodus system [Makowski 2002]

Node connection system for NS space truss

Figure 2.20 shows the detail of node connection system for NS space truss. It was introduced around 1970 by the Nippon Steel Corporation for the huge roof at the symbol zone of Expo´70 in Japan. The node connector consists of a thick spherical steel ball node opened at the bottom for bolt insertion and assembly.

The structural members are steel hollow sections having specially shaped end cones containing threaded bolt holes welded to both ends of the tube. Special high strength

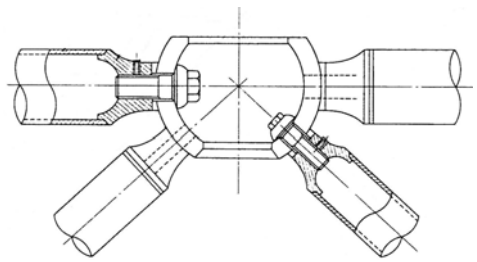

Figure 2.20:
Detail of node connection for NS space truss [Makowski 2002]

bolts were used to connect the tubular members to the spherical node. Several members could be connected to the node from any direction and eccentricity of internal forces could be avoided [Lan 1999].

The Temcor´s aluminum connection system

The American company, Temcor, has introduced many aluminum spatial structures. Using the adavantages of aluminum, such as its high corrosion resistance, high strength-to-weight ratio and manufacturability, Temcor has completed many long span aluminum spatial structures. In order to realize in aluminum long span structures, Temcor has developed its own connection system.

Typical joint details are shown in Figure 2.21. To assure high moment transfer at the joints, the beam elements are connected with top and bottom gussets. The structural beams are symmetrical “I” sections with extruded grooves for connection of an interlocking panel and batten system. The panel has no bending stiffness and transfer of the environmental loads to the beam extrusion occurs through membrane action. The panel also stabilizes the top flange of the beams to prevent column buckling in the minor axis direction [Lopez 1997].

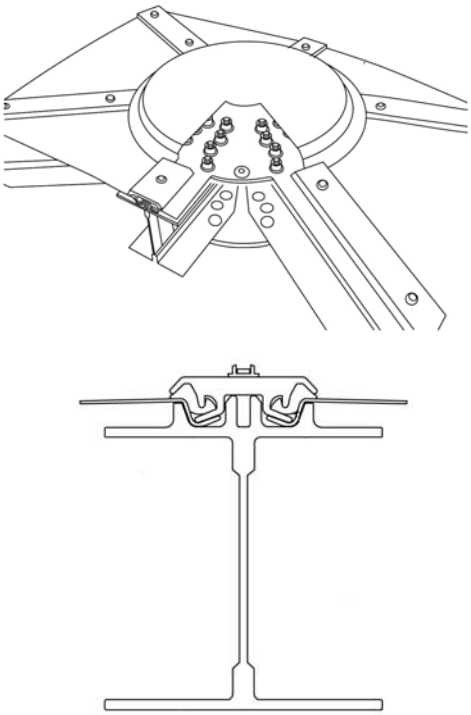

Figure 2.21:
Details of Temcor aluminum connection system [Lopez 1997]

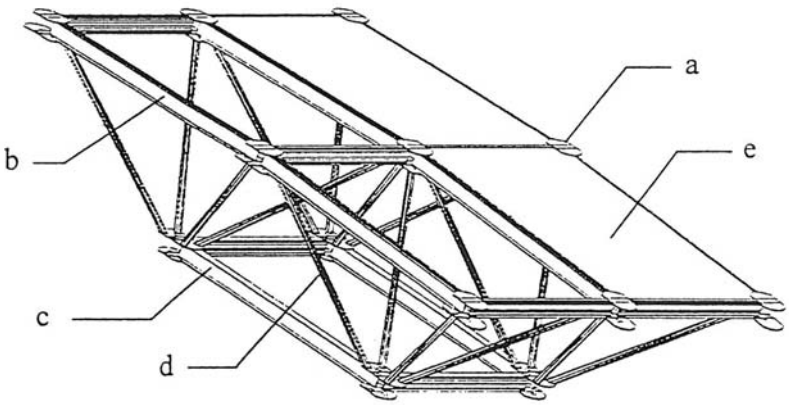

a : Formed aluminum gusset
b : Top chord, aluminum “I“ beam
c : Bottom chord, aluminium “I“ beam
d : Diagonal aluminum pipe member
e : Insulated aluminum panel

Figure 2.22:
Typical double layer system with the Temco aluminum connecting system [Lopez 1997]

The SDC system

The SDC node connection system developed by a French designer M. S. du Chateau is shown in Figure 2.23 and 2.24. The node consists of two cast shells which could be welded together to provide six circular holes, allowing connection by welding six tubular units at the same nodal point. However, the connections were up to 13 struts intersection by welding (Figure 2.24). The tubular components can slide into the node which allows a certain amount of angular adjustment, permitting a gradual change of the curvature of the surface of the structure. This system was, as usual, used for three-way double-layer lattice space grids or three-way single-layer grids [Borrego 1968] [Makowski 2002].

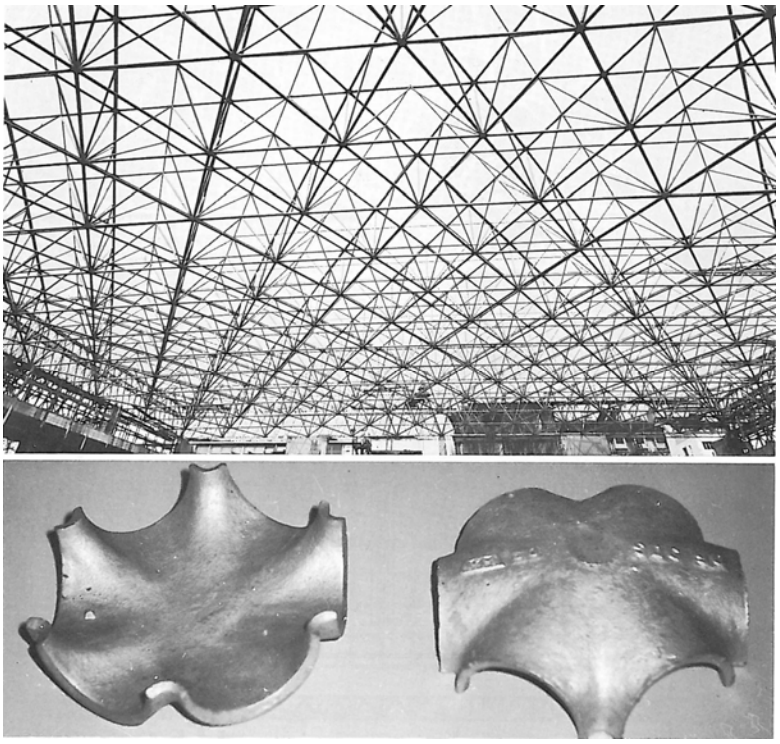

Figure 2.23:
Three way double-layer grid with SDC system [Borrego 1968]

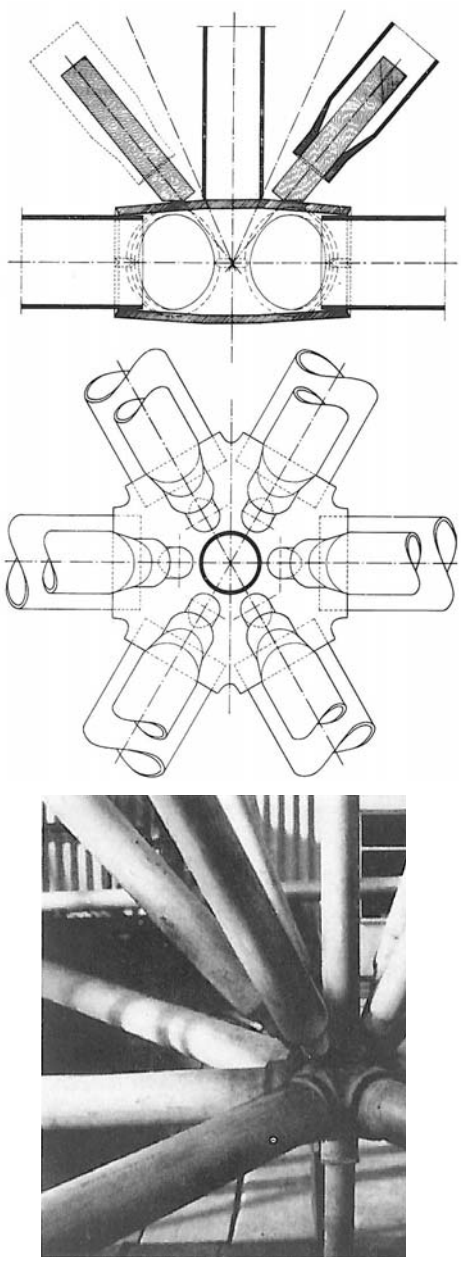

Figure 2.24:
Details of SDC system [Borrego 1968]

Wachsmann and Smith system

In 1968, Wachsmann and Smith produced an interesting design intented to overcome a limited degree of member angle variability to a three-dimentional node. Even though it is still based on the orginal presumption that all the member forces are coinciding, this design utilizes two concentric spherical layers, each consisting of four seperate mantles which arranged a central ball. The mantles, which contain the member attachment points (Figure 2.26a and 2.26b), are then sealed to the ball by two hemispherical caps which are jointed to form a tension-resisting outer case, with an allowance of movement of the incoming members over a limited range of angles (Figure 2.26c).

This sophisticated internal arrangement of the joint gives it four main connections lying in the x-y-z ± 10° directions (Figure 2.26a), and four secondary, variably oriented, connections each capable of movement though a radial arc of some 75°. This trial to utilize connectric spheres as the means to increase the scope for member attachment locations, therefore ensuring the member forces pass through the center of the sphere, represented a novel and radical departure from the Mengeringhausen concept [Bardell et al 1997].

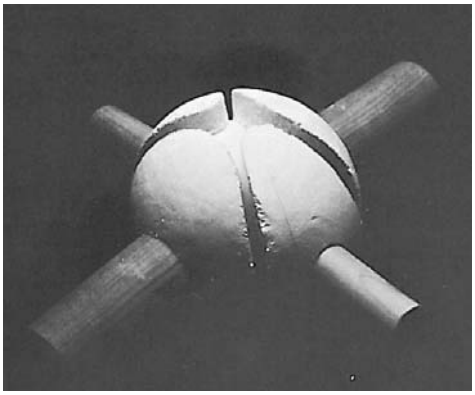

(a) The primary member attachments and their mantles

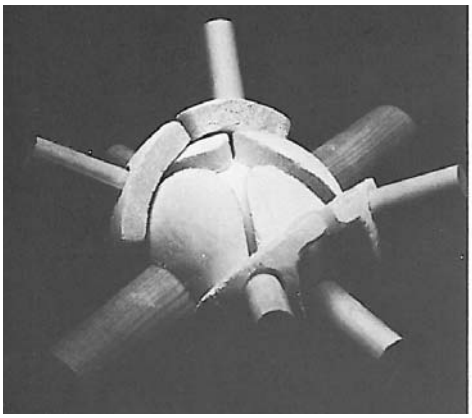

(b) The secondary member attachments and their mantles

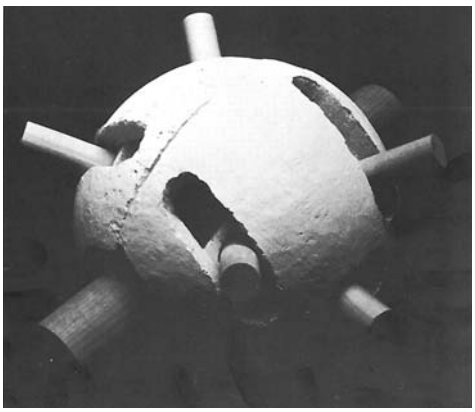

(c) The complete joint, showing the tension resisting outer case

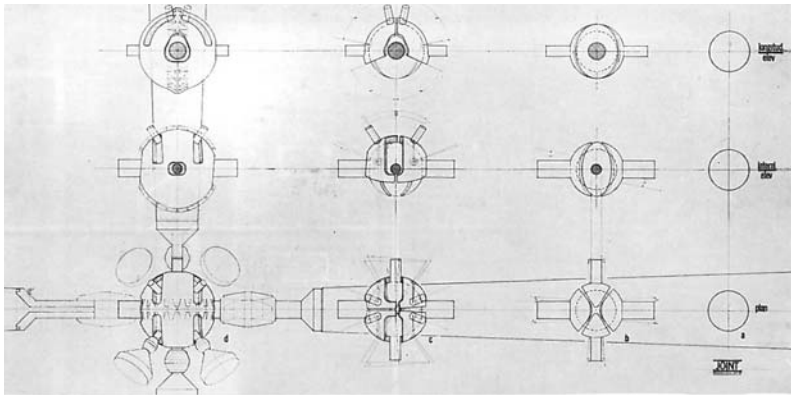

Figure 2.25:
Skatch of Wachsmann and Smith detail principles [Borrego 1968]

Figure 2.26:
Detail of Wachsmann and Smith joint [Bardell et al 1997]

2.3 Connection systems for single layer grid shells

Based on the recent architectural demand for transparent surface structure, single layer enveloped structures are becoming more popular. To fulfill their structural and geometrical requirements of the whole single layered structure, many node connection systems have been developed. Moreover, since free-form or complex-shaped buildings has been introduced to the field of architecture, the development of appropriate node connection system has become an essential part of whole structural stability. Contrary to double layered structures, the connector must bear not only axial force but also bending moment to ensure structural integration. In this section, the author would like to introduce several node connection systems that were used in single layer spatial structures, in order to determine the importance of the node connection system for the structural integration of the whole structure.

Splice node connection

Mainly, there are two characteristics of splice node connector. At first, the contact surface between the node and the connected structural member goes along splice plates in the longitudinal axis of the member. According to the connecting style, one or two contact surfaces, which the shear force would be transferred, can be presented. Secondly, the connecting can be assembled as a bolted splice with shear-stressed bolts or by welding [Stephan et al 2004]).

Splice node connection SBP-1

Figure 2.27 shows one of splice node connection SBP-1 which was developed by Schlaich Bergermann & Partner, Stuttgart, Germany in 1988. The end of the beam is fabricated as half of a fork-shaped flat plate to be connected with a splice by two or more bolts, so that it has a single shear plane in the connection. Through the central bolt the horizontal angles between beam members can be adjusted.

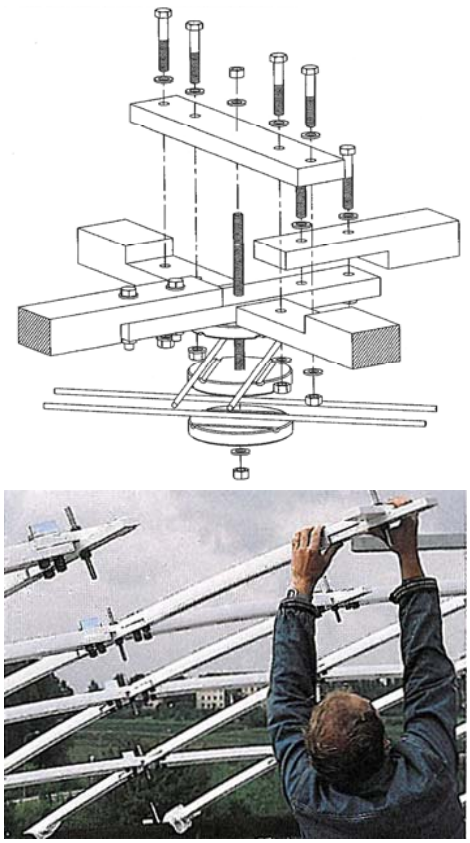

Figure 2.27:
Assembling procedure of connectors SBP-1 [Heinle 1996] [Fischer 1999]

As for the vertical angles, the splice plate has to be folded. Twist angles can be controlled only in a very restrictive range. Consequently, the low section height may cause a low transfer of bending moment [Stephan et al 2004]. This connector system SBP-1 was adopted in several single layer reticulated domes, such as the courtyard roof of the City History Museum in Hamburg (Figure 2.28) and the roof of the indoor swimming pool in Necharsulm in Stuttgart, Germany [Schlaich et al 1992].

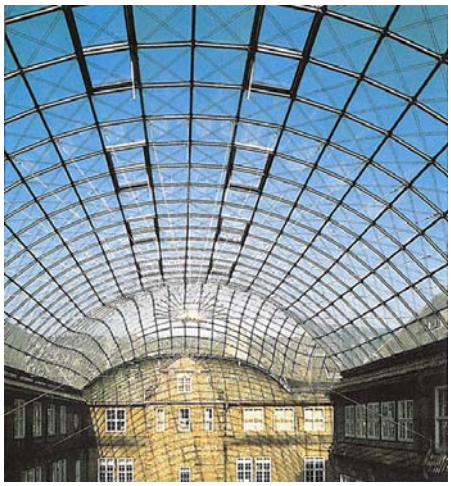

Figure 2.28:
City History Museum in Hamburg
[Heinle 1996]

Splice node connection SBP-2

The splice node connector SBP-2 is shown in Figure 2.30. This node connector is modified from the previous version of SBP-1. The end of beam is fabricated in one of two types. The first is a typical fork-shaped end of beam and the other is an opposite method of fabrication in which two splice plates can be attached on both the top and underside of the beam. They are all connected by two or more bolts in double shear surfaces. The applying limitation for the horizontal, vertical and twist angles are almost same as previous version SBP-1. Due to the double shear sufraces in the joint, this node connector system can bear higher bending moments than the one of SBP-1 [Stephan et al 2004]. Figure 2.29 shows the application of the node connection system SBP-2 in the roof structure of the railway station Berlin-Spandau [Schlaich et al 1999].

Figure 2.29: Railway station of Berlin-Spandau used SBP-2

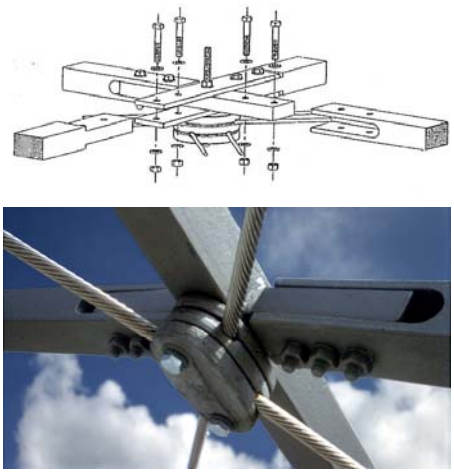

Figure 2.30:
Connection system SBP-2
[Fischer 1999]

Splice node connection POLO-1

Figure 2.31 shows a splice node connector POLO-1 developed by Polonyi & Fink, Cologne, Germany. This connector consists of a cylindrical or prismatic core and up to six vertical splice plates. The end of beam was fabricated as a fork-shaped form to be welded to two steel plates, and then the splice of the node is inserted to the end of the beam and connected by two or more bolts. Horizontal, vertical and twist angles of the structural members can be adjusted by changing the geometry of the splice plates. This connection system can transfer a high bending moment. The canopy roof of the railway station in Cologne used this node connection system [Stephan et al 2004].

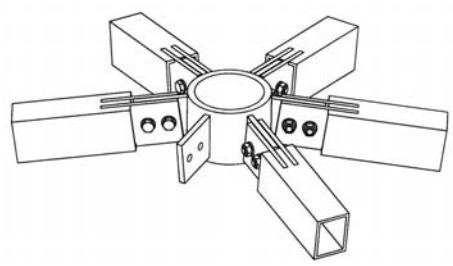

Figure 2.31:
Node connection POLO-1 [Stephan et al 2004]

End-face node connection

The chief identifying characteristic of the end-face connection system is that the connection surface between the node and the end-face of the connected member is transverse to the longitudinal axis of the element member using pretension bolts or welding [Stephan et al 2004]. There are, of course, many end-face connection systems which are used in free form spatial structures, several of which will be mentioned here.

End-face connection MERO disc node (type TK)

Although the Mero system was originally developed for the pin-connected and double layered structures, recently, a modification of the shape of the end pieces welded to the tubular members allows the members to resist bending moments in addition to axial forces [Makowski 2002].

Originally, the Mero system was developed for double layer grids. However, the increasing requirement of non-planar roof forms brought the usage of the load-bearing space frame integrated with the cladding element. A new type of jointing system was named the Mero Plus System, which is able to express a variety of curved and folded structures. These new node connection system could transfer shear force, resist torsion and bending moment in speci-

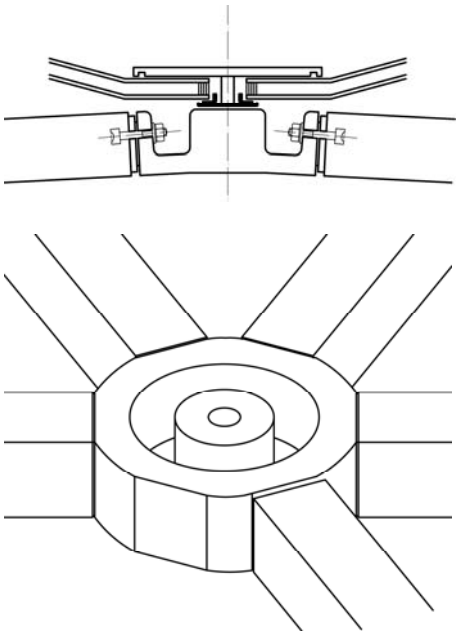

Figure 2.32:
Details of disk node developed by new Mero system (type TK) [Lan 1999]

al cases [Lan 1999] [Makowski 2002].

As shown in Figure 2.32, this type of node connector is a planar ring-shaped node connecting with 5 to 10 members of square or rectangular sections. Only a single bolt was used to connect the node and structural member and depth of the node is the same as the depth of the member section. The load transmission is for the shear force and rotation. In terms of accommodation for local angles, the horizontal angle could be accommodated from 30° to 80°, and the vertical one can vary from 0° to 10°. For application in a global spatial structure, this system is suitable for latticed shells consisted of triangular meshes under pin-jointed conditions [Lan 1999].

End-face connection MERO cylinder node (type ZK)

The basic principle of the type ZK is based on the same one as the disk node type TK. This type consists of a cylinderical node with a multiple bolted connection. The important point is that bending moment could be transmitted by these multiple bolts. As in type TK, 5 to 10 square or rectangular sections can be connected to the cylinderical node to transfer loading. Connection angle varies 30° and 100° for the horizontal angle, while for the vertical angle, from 0° to 10° is possible. Cylinderical node connectors are used for single and double curved surfaces of lattice shells with trapezoidal mesh, for which the flexural rigid connections are needed [Lan 1999] [Makowski 2002].

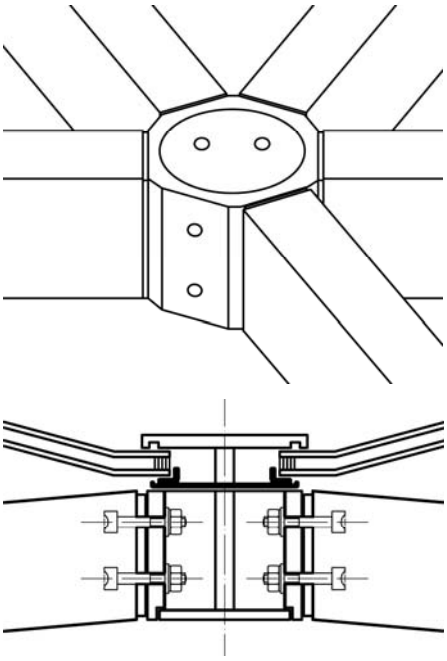

Figure 2.33:
Details of cylinder node developed by new Mero system (type ZK) [Lan 1999]

End-face connection MERO block node (type BK)

The block node, type BK, is shown in Figure 2.34. Each structural member is connected to the block node by one or two bolts, which are mounted from inside the structural member. Thus, the member section must be hollow. As an alternative solution, the members can be welded to the node. In terms of fabrication, the node is cut from a thick steel plate [Stephan et al 2004]. The horizontal angle could

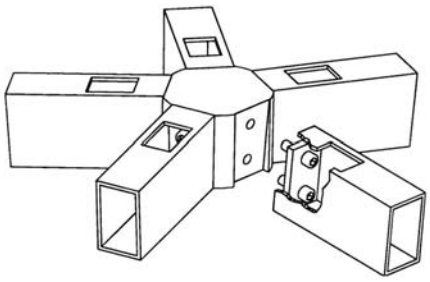

Figure 2.34:
Detail of block node developed by new Mero system (type BK) [Stephan et al 2004]

be accommodated range from 70° to the maximum of 120°. The vertical angle is able to be controlled by 10°. This connector system can be applied both to single and double curved surfaces with the pin and rigid joint where the number of members is small [Lan 1999]. Usually, this node connector is suitable for use with a simple geometry and a small structural dimension.

End-face node connection SBP-4

The end-face node connection SBP-4 is shown in Figure 2.35. This connecting system was developed by Schlaich Bergermann & Partner for the Schlueterhof courtyard roof of the German Historical Museum, Berlin in 2002 (2.36). Two cross-shaped plates composed the main node. For the structural beam, four plates are welded together to make a hole box-shaped in cross-section. The structural beam members are then connected to the node end-faces with butt welds. In order to erect, each member can be provisionally connected to the node end-faces using bolts [Stephan et al 2004]. To strengthen the overall structural capacity, two cables pass through in the node connection and are secured using a clamp for the cable bracing.

In terms of geometrical accommodation, horizontal angles of each structural member at this node are determi-

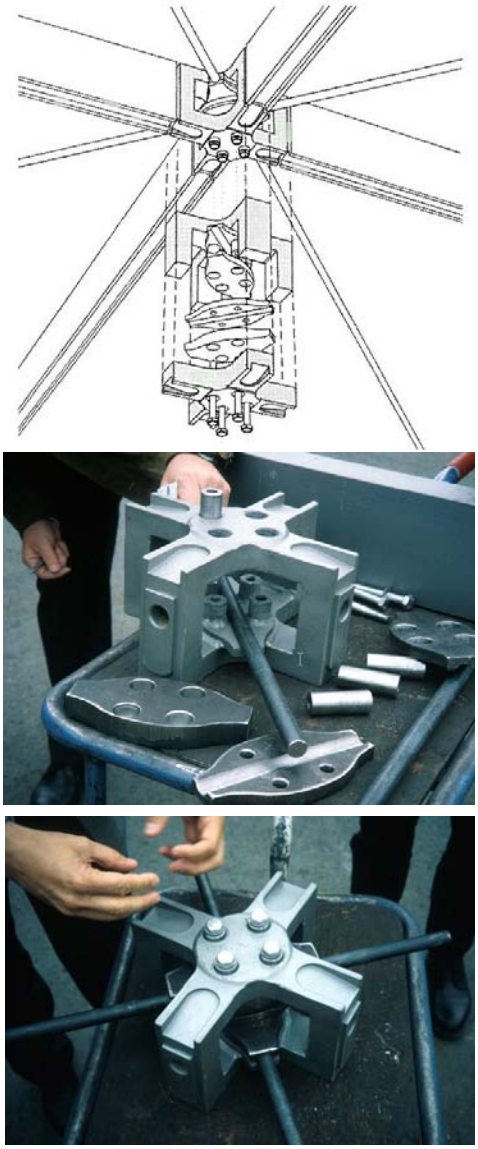

Figure 2.35:
End-face node connection system SBP-4
[Schlaich et al 2003]

Figure 2.36:
Schlueterhof courtyard roof of the German Historical Museum, Berlin

ned by the prefabricated geometry of the two cross-shaped plates. The vertical angle can be achieved through the specific handling; for example, cutting the node face. However, twist angle can be limited in the certain range. As for the structural capacity of this end-face node connector, due to a sufficient height of cross section, high bending moments can be transferred to the full member strength [Stephan et al 2004].

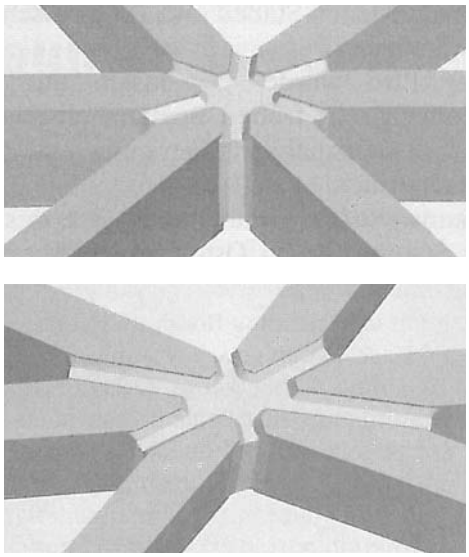

Figure 2.37:
End-face connection WABI-1 with various horizontal angles [Sischka et al 2001]

End-face connection WABI-1

Figure 2.37 presents one of the welded end-face connector WABI-1, which was developed by Waagner-Biro AG, Vienna in Austria. This system was used in the courtyard roof of the British Museum in London (Figure 2.39) [Anderson 2000] [Sischka et al 2001]. The node is a star-shaped plate with 5 or 6 arm plates. Due to the milling machine, the entire node can be fabricated by cutting a thick steel plate, and the end faces of the structural members are milled to have a double mitre to match with the corresponding node gap between arms (Figure 2.38). The cross section of each member is higher than the node. The top and bottom surfaces of the node plates are welded using fillet welding, and the side surfaces are connected by butt welds. As for the horizontal, vertical and twist angles, the structural

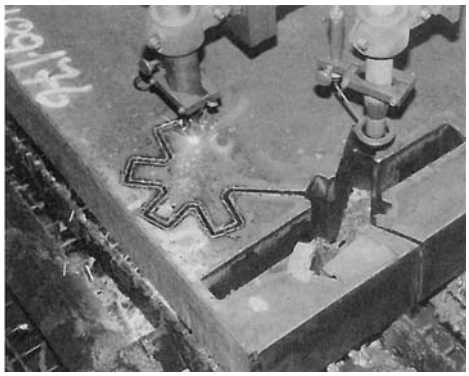

Figure 2.38:
Cutting of nodes of WABI-1 out of steel plate 180 mm with milling machine [Sischka et al 2001]

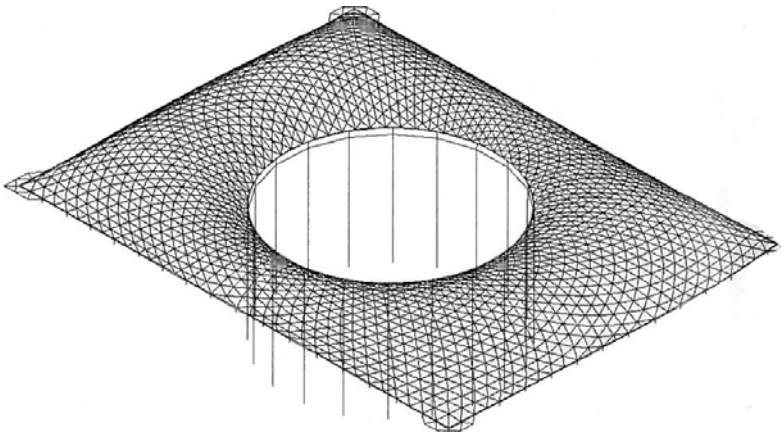

Figure 2.39:
Simulation of the roof in the British Museum in London [Sischka et al 2001]

members at the node can be adjusted by the geometry of the double mitre cuts at the end of the beam members. High bending moments can be transferred to the full member strength [Stephan et al 2004].

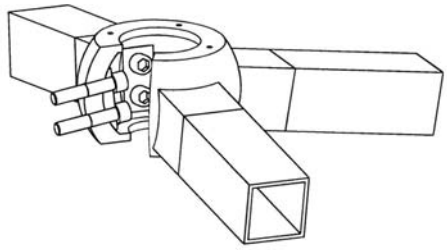

Figure 2.40:
End-face node connection OCTA-1 [Ramaswamy et al 2002] [Stephan et al 2004]

End-face connection OCTA-1

The end-face connector OCTA-1 was introduced by Octatube Space Structures BV, Delft, Holland [Ramaswamy et al 2002]. This system consists of a hollow spherical node with structural beam member. Each structural member is connected to the node sphere by two bolts, the assemby of which can be accomplished from inside the hollow sphere. To control the angles of geometry, two bolt holes for each member should be accommodated (Figure 2.40) [Stephan et al 2004].

End-face node connection MERO-4

Figure 2.41 and 2.42 show the end-face node connector MERO-4. The firm MERO developed this node connector for the free-form roofs over the Central Axis and the Service Center of the New Fair in Milan, Italy (Figure 2.43). Basically, the node consists of two dish nodes, one for the top chord of the structural member and the other for the bottom chord at the end of each member. The structural beam members meet at the end-face of the node and are connected to both nodes by bolts or welding. The middle of the dish nodes are fabricated with a circular hole to enable assembly *in-situ*. As for the angles of structural members, all of them can be pre-fabricated by the geometry of the machined plane surfaces at the nodes to adjust complex-

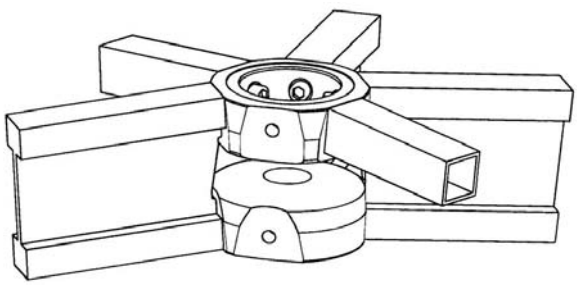

Figure: 2.41
End-face node connection MERO-4 [Stephan et al 2004]

Figure 2.42: Inside of connector MERO-4 [Knobel 2004]

Figure 2.43:
Free form surface of the New Fair in Milan, Italy [Schober et al 2004]

shaped surfaces for the project.

Based on the mentioned connection systems, Figure 2.44 through 2.48 show the adaptibility of accomodation for various local angles and the transferability of internal force of various connection systems [Stephan et al 2004]. The node connection systems HEFI-1 and SBP-3 were not mentioned in this chapter, however the explanation of geometrical form will be introduced in the next chapter to understand their specific characteristics.

Generally speaking, there has been not enough reported to compare connection systems, especially as used for the single-layer grid shell or free-form spatial structure, because there are so many systems that have geometrical characteristics which differ too greatly to compare exactly. Despite this, K. Fischer introduced a comparison of node connections for single layer structures in 1999 [Fischer 1999] and S. Stephan introduced the relative comparison of connection systems used in single-layer reticulated structures in 2004.

In general terms of adaptability in accommodating of various local angles, when the angles could be adjusted by the node´s accommodation, the applicabilities of angles are better than those controlled by the end of member.

Concerning the transferability of internal forces, the end-face node connections show better capabilities than

splice connections, relatively; that is, the more closed faces between node and end of beam, the better the transferred load to the structural member. In the case of a connector having only one shear surface, for example SBP-1, the capability of loading transfer is lower than for those which consist of at least two shear surfaces.

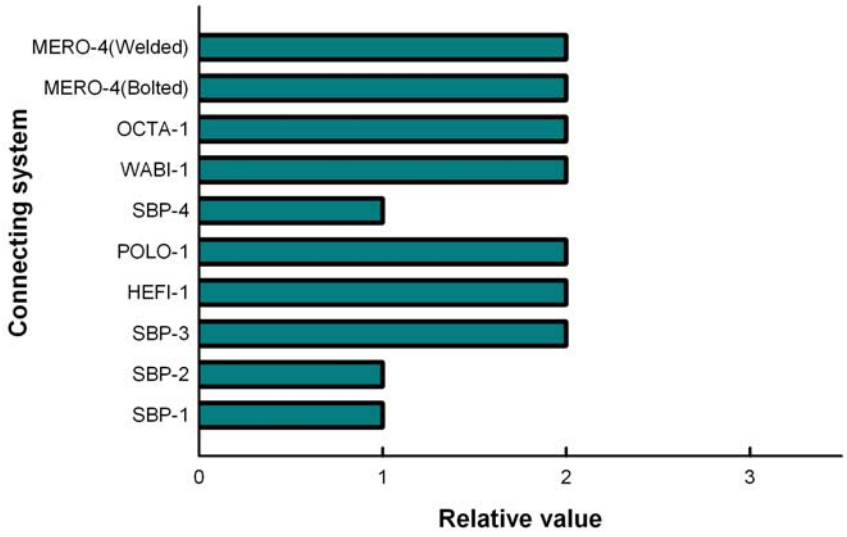

Figure 2.44:
Adaptability of accommodation for horizontal angle [Stephan et al 2004]

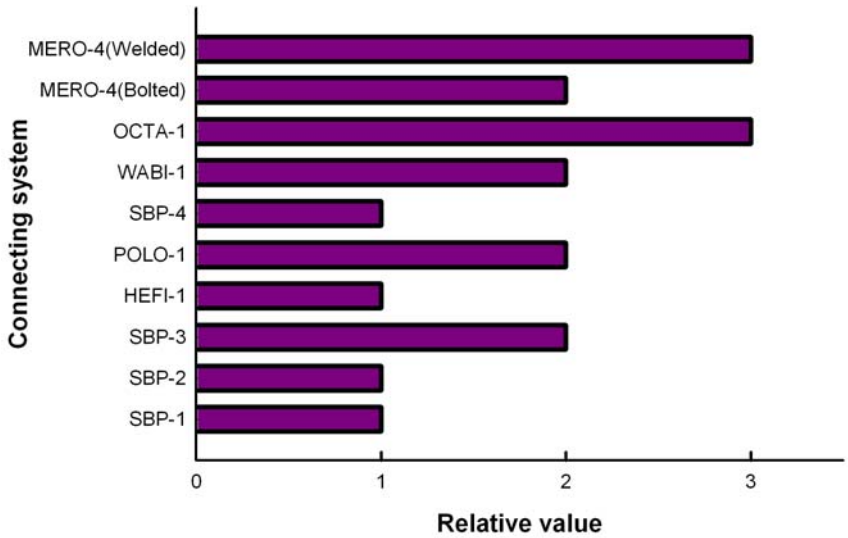

Figure 2.45:
Adaptability of accommodation for vertical angle [Stephan et al 2004]

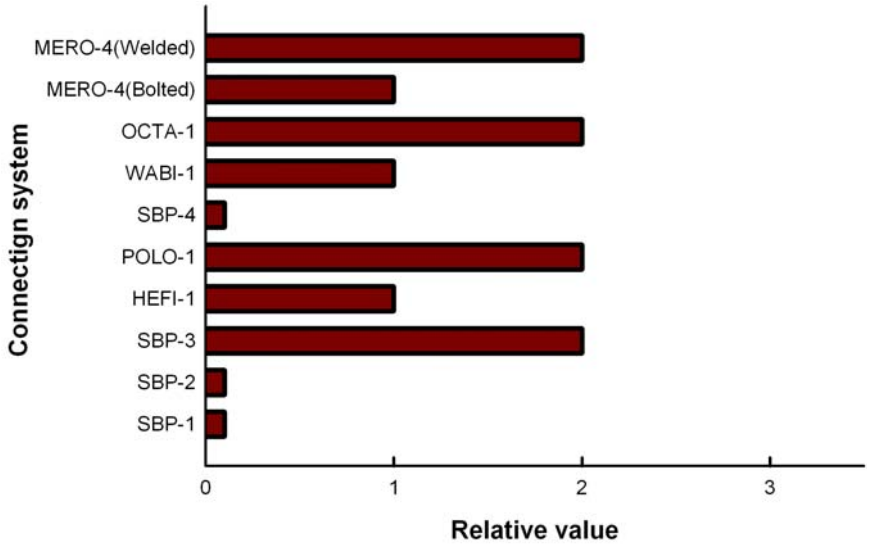

Figure 2.46:
Adaptability of accommodation for of twist angle [Stephan et al 2004]

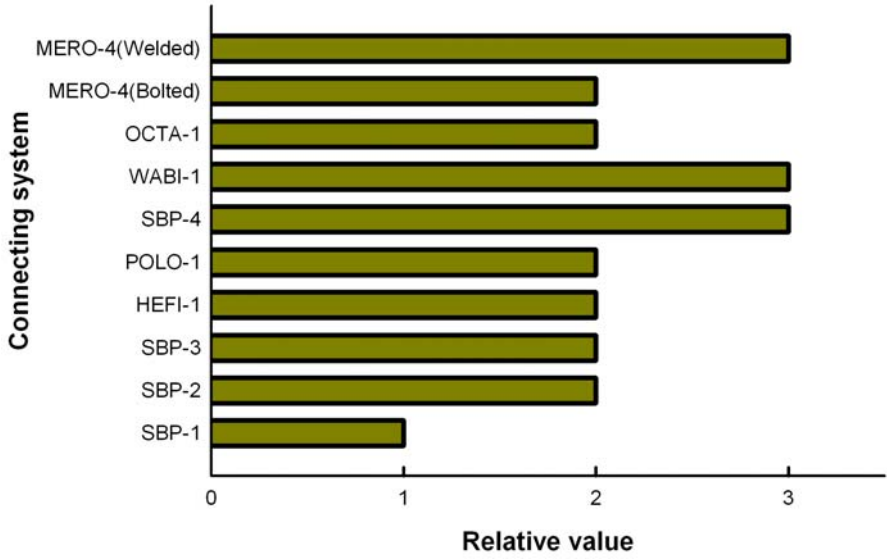

Figure 2.47:
Transferability of axial force [Stephan et al 2004]

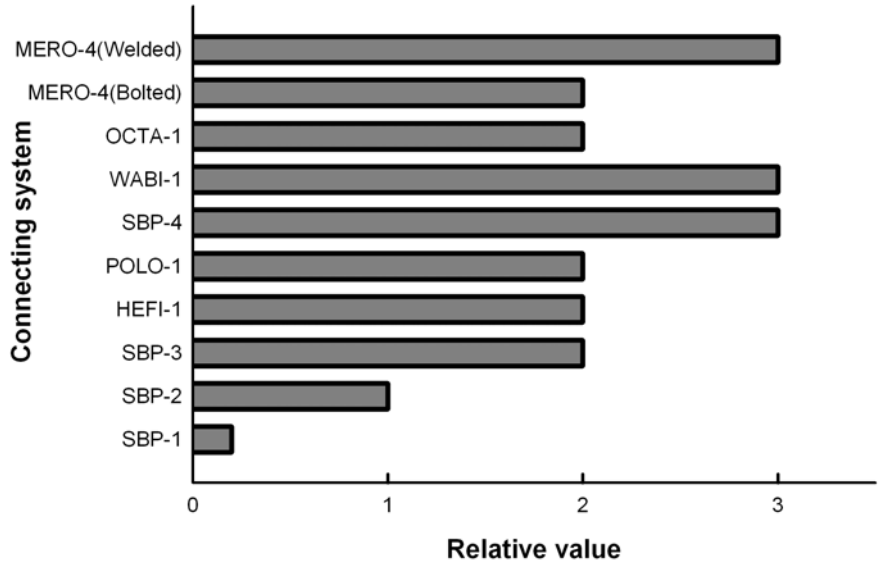

Figure 2.48:
Transferability of bending moment [Stephan et al 2004]

2.4 Recent connection system used for free form grid spatial structures

The node connection system for the free-form roof Westfield in London, England

In 2007 the Buchan Group International and Benoy designed a shopping center in London. To cover the mall area, they created a 17,000 m² of free-formed glass roof (Figure 2.51). Knippers Helbig Consulting Engineers, Stuttgart and the fabricator Seele cooperated on the engineering design [Knippers et al 2008]. As shown in Figure 2.49, they developed a node connection system which would both implement complex-shaped curvature and fulfill required loading capacity.

The jointing principle here is a bolt connection of a hollow beam to the node where the end faces meet perpendicularly (Figure 2.49a). The node consists of twenty-six different elements to create the perpendicular surface and different connection geometries (Figure 2.49b). This node connector has a high structural capability and satisfies the architectural requirements, because there is no gap between nodes and beams which make the force transfer of external loads very effective. Figure 2.50 shows the final check of the node connectors to ensure geometrical accuracy.

(a)

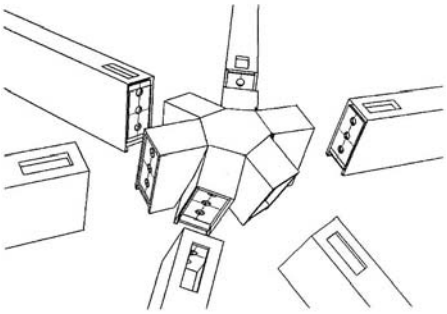

(b)

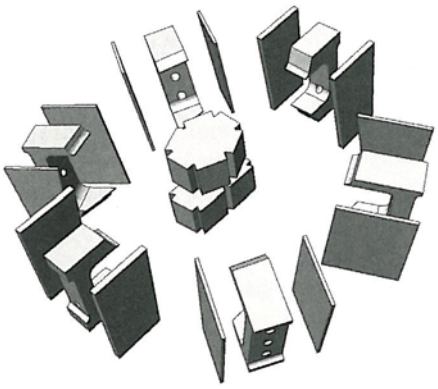

(c)

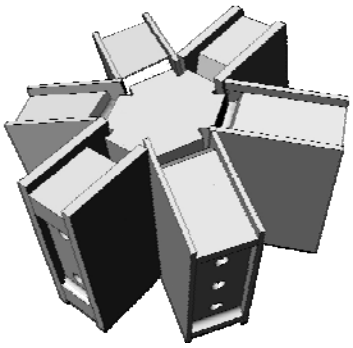

Figure 2.49:
End-face node connector for the free-formed glass roof for Westfield, London [Knippers et al 2008]

(a)

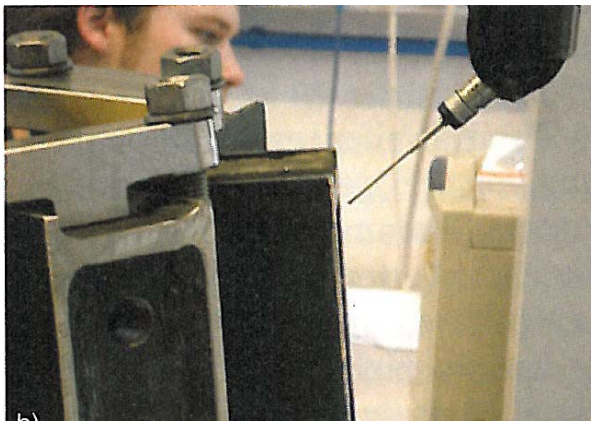

(b)

Figure 2.50: Milling of connector (a) and final check of geometrical accuracy (b) [Knippers et al 2008]

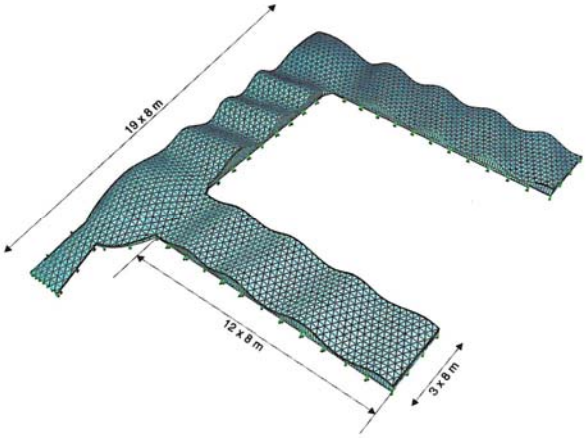

(a)

(b)

Figure 2.51: Grid for structural analysis (a) and interior view of Westfield (b) [Knippers et al 2008]

The node connection for free-form glass roof My Zeil in Frankfurt, Germany

Figure 2.52 shows details of node connection system used in the free-form glass roof of My Zeil in Frankfurt, Germany, completed in 2008. The complex building was designed by Italian architect Massimilano Fuksas and structural design performed by Knippers Helbig Consulting Engineers in Stuttgart, Germany. An approximately 13,000 m² area of free-form glass roof covers this building.

Related to the solution of the connection system, the manufacturer Waagner-Biro, Wien, suggested a welded node construction. A star-formed steel node was introduced as the center of the node where the end of each beam could be connected by welding. In order to implement the required complex geometries at the node, ten percent of the total number of node (2,500) had to be made of steel plates [Knippers et al 2008].

For the beam section, a welded hollow steel box section with a standard dimension 120 mm × 60 mm was used. The thickness of each plate was calculated to be fulfilled with their static stress. As shown in Figure 2.53, the beam section and node were designed to overlap so that the treatment of the welding joints between flange and web would not be necessary.

The overlapped connections were designed more on

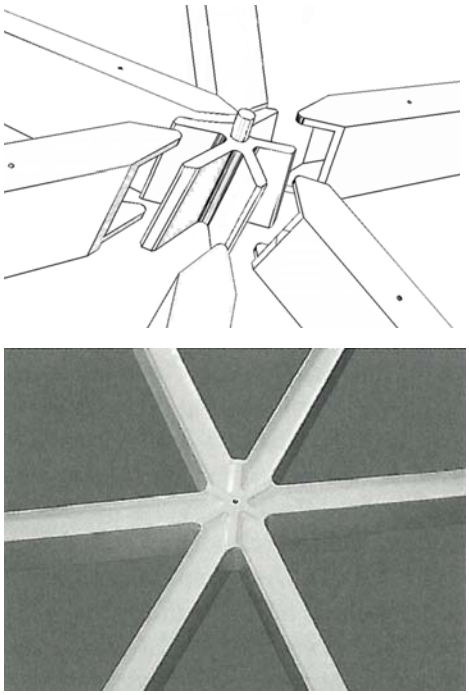

Figure 2.52:
End-face node connection for the free-formed glass roof for My Zeil, Frankfurt [Knippers et al 2008]

Figure 2.54:
Marginal designing condition of grid generation for My Zeil
[Knippers et al 2008]

Figure 2.53:
Mock-up design of connector

the divided edge, where the beams could be followed smoothly (Figure 2.54 and 2.55) [Knippers et al 2008] [Hwang et al 2009]. Thus far, based on the reported literatures, the overview of connection systems used for double layer space structures, single layer grid shells and recent free-form grid spatial structures has been introduced to describe the general characteristics of connection systems. In order to detail the simulation of the structural integration of the aforementioned connection systems into the whole global structure, four connection systems will be selected to represent the main characteristics of the connection systems in Chapter 4.

Figure 2.55:
Inside of My Zeil